DRAWING NUMBER	SIZE
300957020	4

TOLERANCE FOR ASSEMBLY	
DIVISION DIMENSION	TOLERANCE (IT 12)
-10	±0.08
10-30	±0.11
30-50	±0.13
50-80	±0.15
80-120	±0.18
120-180	±0.20
180-250	±0.23
250-315	±0.26
315-400	±0.29
400-500	±0.32
500-630	±0.35
630-800	±0.40
800-1000	±0.45

REVISIONS				
REV	ZONE	DESCRIPTION	ECM	CHECKED
A		PRELIMINARY HSG/FBZ 01/16/13	XXXXXX	XXX XX/XX/XX

COMPUTERIZED DOCUMENT
NO MANUAL REVISIONS PERMITTED

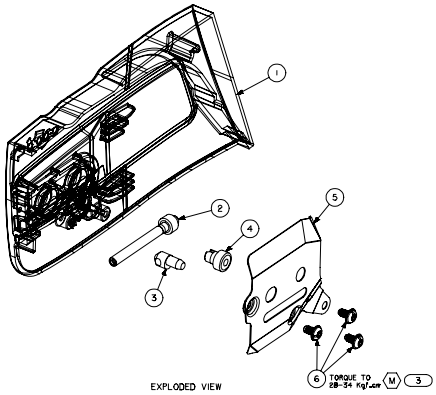

EXPLODED VIEW

PRELIMINARY

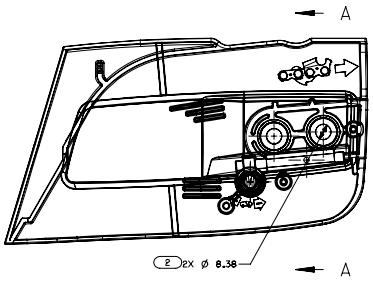

SECTION A-A

PRELIMINARY

ITEM	PART NUMBER	DESCRIPTION	QTY
6	660922002	SCREW	3
5	631038003	STAMPING, GUIDE PLATE	1
4	610624002	GEAR	1
3	678327001	NUT, ADJUSTMENT	1
2	610623001	SCREW, ADJUSTMENT	1
1	511729019	COVER, CLUTCH	1

NOTES: 1

M 1. REFER TO COMPONENT DRAWING FOR INSPECTION CRITERIA

2. SEE QUALITY ASSURANCE FOR ADDRESSING CRITICAL AND MAJOR DIMENSIONS

TOTAL C THIS PAGE = 0

TOTAL M THIS PAGE = 2

300957020	CLUTCH COVER ASSY	AS PURCHASED
PART NUMBER	DESCRIPTION	REMARKS

M.S.
P.S.
DIST --- PURCH/FAB P

"THIS DRAWING BELONGS TO TTI GROUP NORTH AMERICA. ITS CONTENTS ARE CONFIDENTIAL AND PROPRIETARY AND SHALL NOT BE DISCLOSED TO OR USED BY OR FOR OUTSIDE PARTIES WITHOUT TTI GROUP NORTH AMERICA'S WRITTEN CONSENT."

UNLESS OTHERWISE SPECIFIED DIMENSIONS ARE IN MILLIMETERS. FOR ALL UNSPECIFIED DIMENSIONS PLEASE REFER TO THE CAD FILE. DO NOT SCALE. USE DIMENSIONS ONLY. DIMENSION & TOLERANCE PER ASME Y14.5-2009

THIRD ANGLE PROJECTION

DRAWN BY HSG	DATE 01/16/13	TTI GROUP NORTH AMERICA
CHECKED BY FBZ	DATE 01/16/13	TITLE CLUTCH COVER ASSY
APPROVED BY KW,MA	DATE 01/16/13	
MATERIAL SEE BOM		SIZE 4 · DRAWING NUMBER 300957020 · REV A
		SCALE 1:1 · 3 · SHEET 1 OF 1