metabo®

W 8-125

00263000

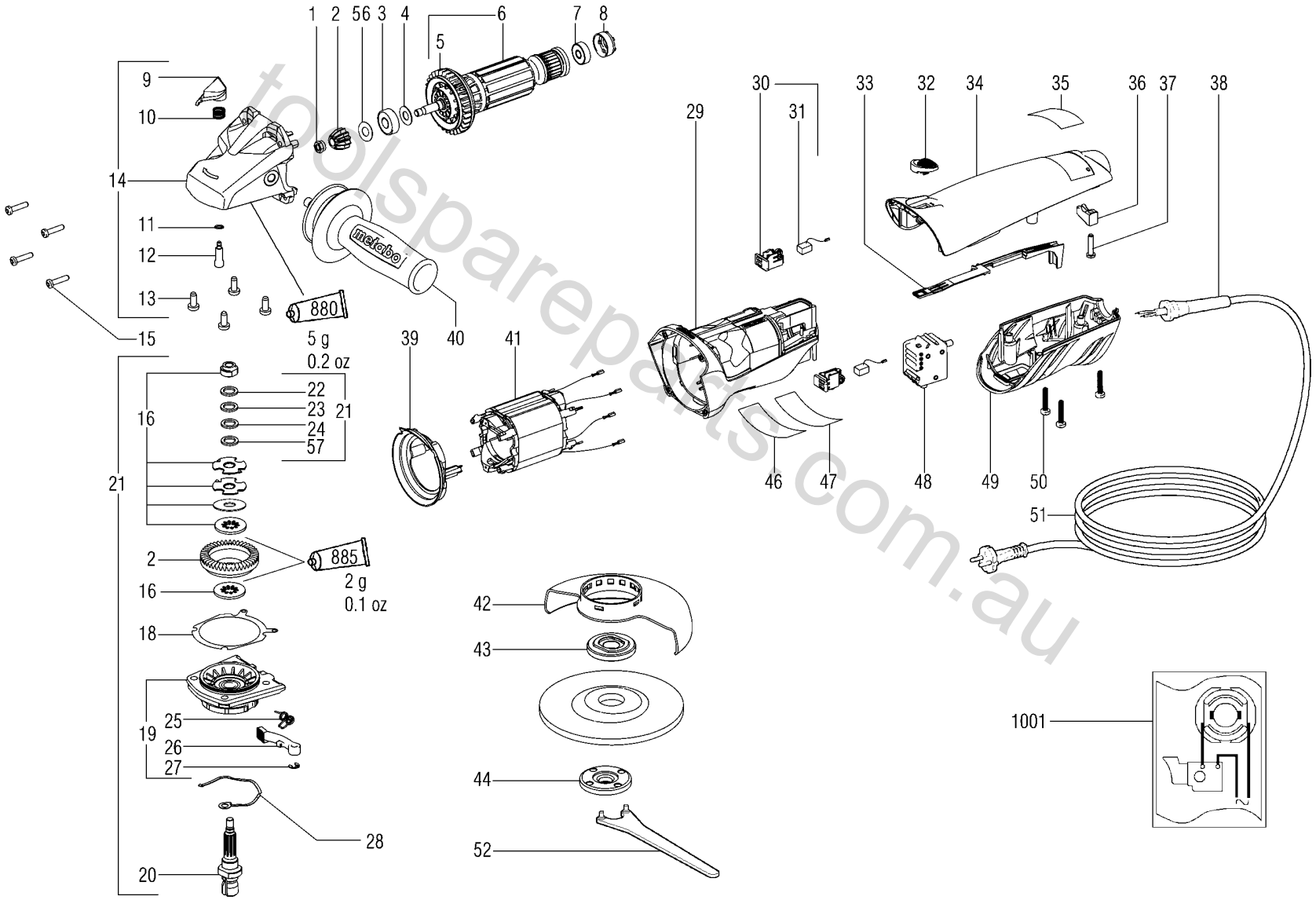

toolsparepartsdirect.com.au

metabo®

W 8-125

00263000

Position	Amount	Type number	Description	PG
1	1	341100940	Hexagon nut w.recess	12
2	1	316041660	Bevel gear w.pinion	25
3	1	143115180	Ball bearing,8x22x7	17
4	1	339133060	Washer,8,05x17x0,4	10
5	1	316041450	Fan w. prot. Grid	17
6	1	310009040	Armature compl.,230V	37
7	1	143115170	Ball bearing,6x19x6	16
8	1	344097870	Rubber bushing	10
9	1	343393410	Push button	10
10	1	342003390	Pressure spring	10
11	1	143193650	O-ring	10
12	1	341515280	Bolt	10
13	4	141121640	Fill. head screw(DIN 7985)	10
14	1	316041440	Gear housing compl.	32
15	4	141116020	Self-tap fill h screw	12
16	1	316041650	Friction washer cpl.	23
18	2	339011570	Gasket	10
19	1	316041720	Flange w.clamping lever cpl.	29
20	1	341161030	Spindle shaft	27
21	1	316041680	Safety clutch w.pinion,230V	36
22	1	141151120	Washer 10,2 X 14,8X 0,2	10
23	1	141152300	Washer 10,2 X 14,8X 0,1	12
24	1	141153920	Washer 10,2 X 14,8X 0,5	10
25	1	342022040	Spring clip	10
26	1	341070440	Lever	14
27	1	141181810	Circlip	10
28	1	342050840	Compression Spring	11
29	1	315013210	Motor housing	19
30	2	316045980	Brush holder compl. cut out	21
31	1	316046800	Carbon brush set	20
32	1	343392980	Switch slide	10
33	1	343393110	Switch rod	10
34	1	343392990	Housing cover	16
35	1	338122770	M-Label 08 49-51x25	12
36	1	343362490	Cable clip	12
37	1	141116020	Self-tap fill h screw	12
38	1	344100970	Cable sleeve	12
39	1	339151050	Baffle	10
40	1	316046590	Side support handle compl.	20
41	1	311010690	Field coil assembly w.field coil,230V	35
42	1	339203010	Wheel guard,D125	23

toolsspareparts.com.au

43	1	341031160	Clamping flange	22
44	1	341106900	Flange nut	20
46	1	338048860	Rating plate	10
47	1	399999990	Part not needed	
48	1	343408530	Switch	20
49	1	343395600	Housing black	14
50	3	141123490	Fillister head screw	10
51	1	344497160	Cable with plug	21
52	1	344163920	Pin spanner	14
56	1	339006390	Washer,7,05x19,5x0,2	10
57	1	141155550	Washer 10,2 X 14,8X 1,0	10
880	1	344130920	Grease 100G	32
885	1	344130560	Grease SF 011 50Gr 1,8oz	28
1001	1	338504650	Wiring diagram	

toolsharepartsc.com.au

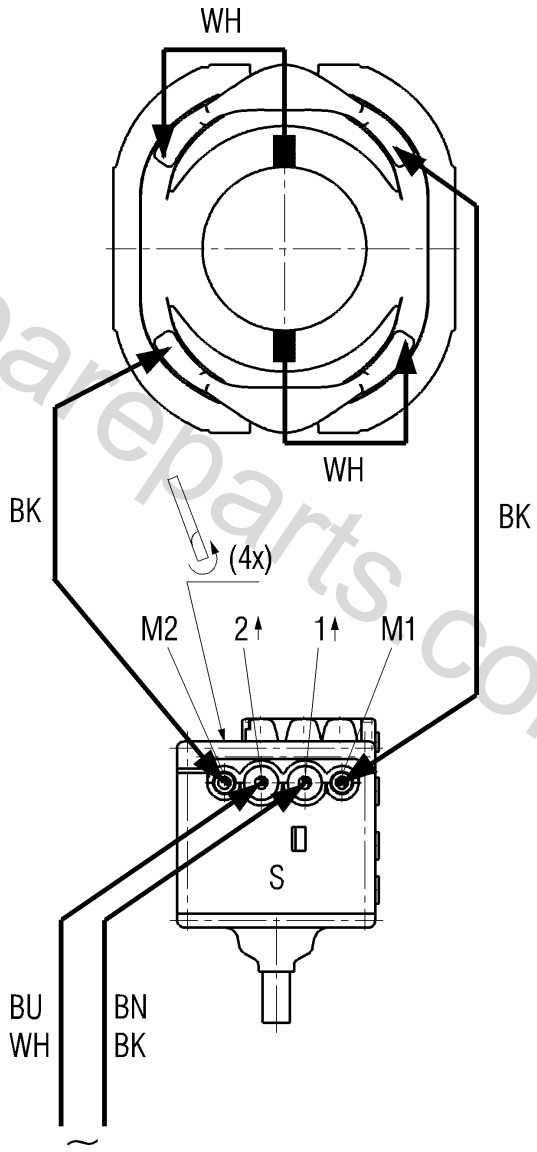

toolspareparts.com.au