DSE 300 Intec

00311380

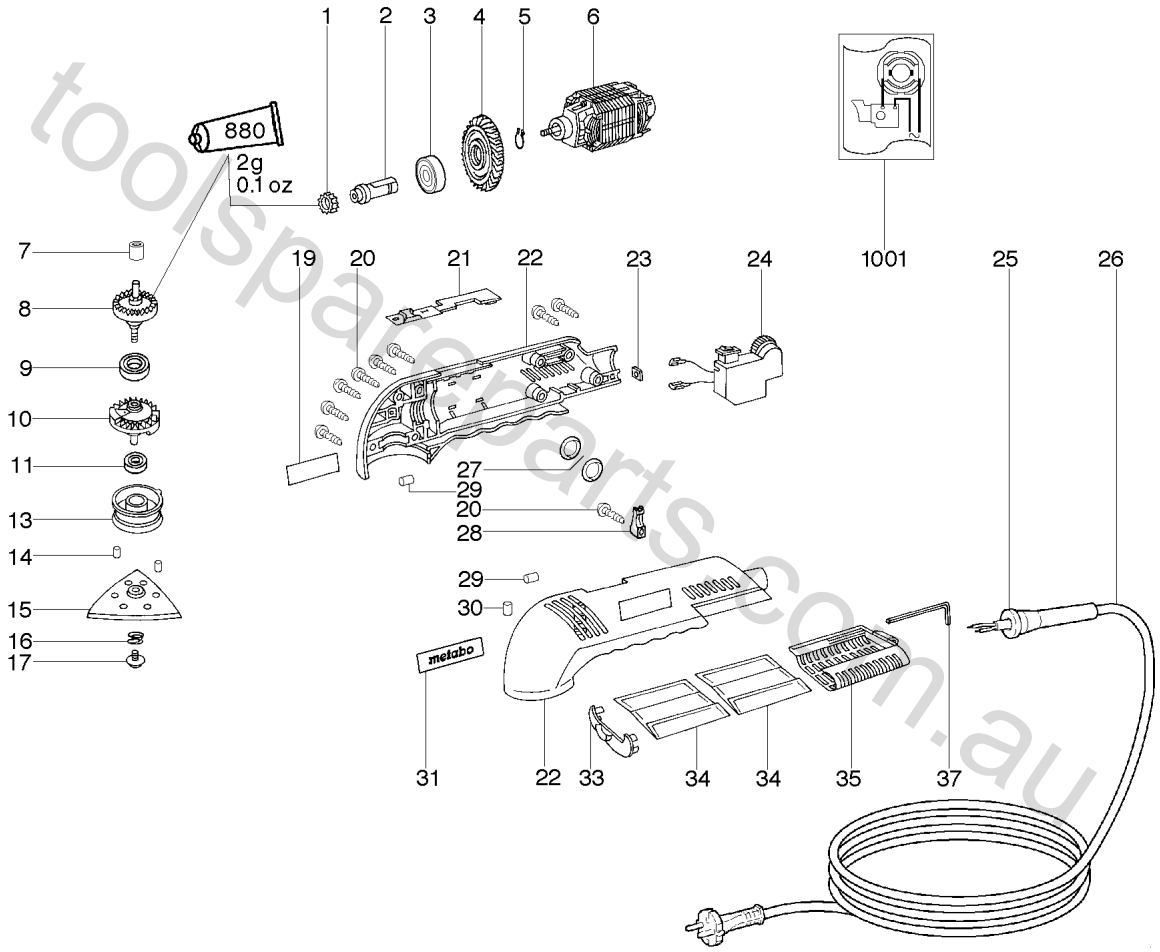

toolspareparts.com.au

metabo®

DSE 300 Intec

00311380

Position	Amount	Type number	Description	PG
1	1	340003270	pinion	10
2	1	341055850	Shaft	25
3	1	143112150	Ball bearing, 10x26x8	24
4	1	330000830	Fan	15
5	1	141180040	Retaining ring	10
6	1	317002480	Motor 230V compl.	34
7	1	341002610	Needle bearing	23
8	1	341055740	Coated shaft	24
9	1	143114670	Ball bearing, 12x28x8	18
10	1	330001530	Fan	23
11	1	143114660	Ball bearing,10x24x7	25
13	1	316029150	Support ring compl.	29
14	2	141163800	Cylindrical pin	10
15	1	339160550	Sanding base plate cpl.	23
16	1	342002760	Pressure spring	10
17	1	341702680	Screw	10
19	1	338038410	Rating plate	10
20	9	141116020	Self-tap fill h screw	12
21	1	343373450	Switch slide	12
22	1	343374480	Housing with cover	27
23	1	141131370	Square nut	10
24	1	343079720	Electronic unit 230V/60Hz	29
25	1	344101140	Cable sleeve	13
26	1	344493740	Cable with plug	27
27	2	143192430	O-ring	12
28	1	343362490	Cable clip	12
29	2	344091420	Rubber plug	10
30	1	344092220	Rubber plug	10
31	1	338114740	Metabo label	10
33	1	343374740	casket cover	13
34	2	344101170	Filter	12
35	1	343374730	dust extraction kit	16
37	1	344161530	Hexagonal key	12
880	1	344130930	Grease 50Gr 1,8oz	30
1001	1	338501100	Diagram	

toolsspareparts.com.au

DSE 300 Intec

00311380

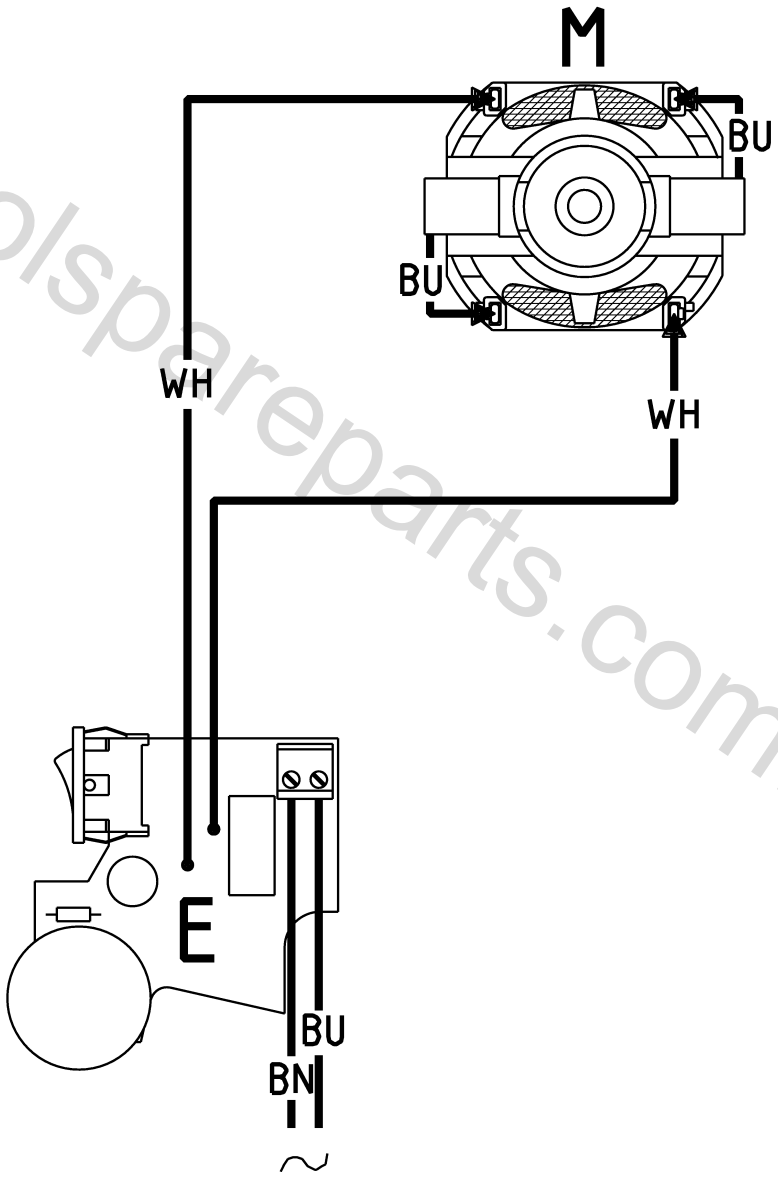

toolspareparts.com.au