metabo®

KS 85

01885001

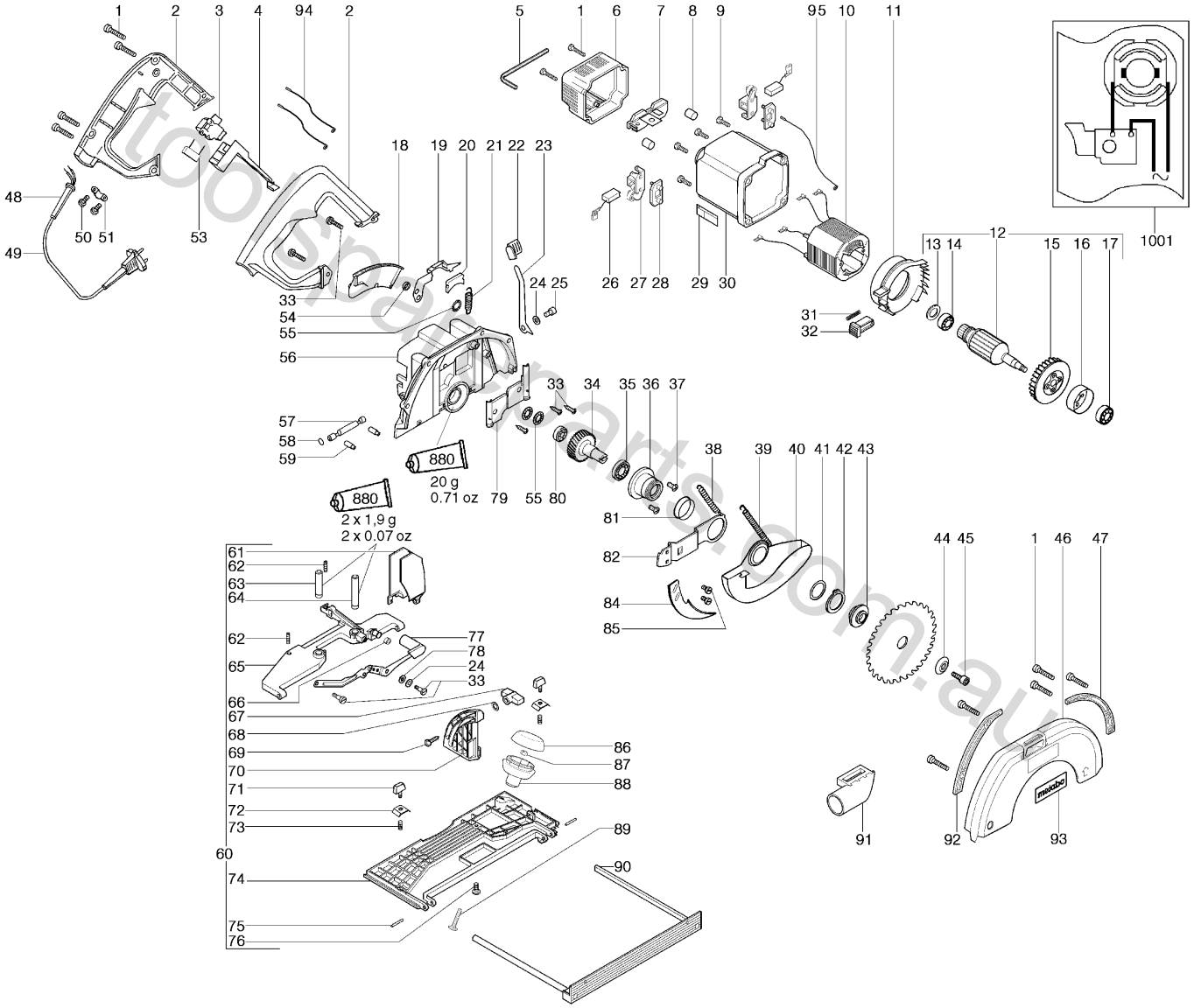

toolspareparts.com.au

metabo®

KS 85

01885001

Position	Amount	Type number	Description	PG
1	1	341703640	SCREW	24
2	1	343378870	Handle half pair	33
3	1	343407410	Switch	29
4	1	343378950	Switch trigger	22
5	1	344161520	Cranked wrench key	12
6	1	343378880	Motor cover	28
7	1	343081070	Regulator	48
8	1	344096410	Pressure plate	22
9	1	341703620	SCREW	22
10	1	311010670	Field coil 230 V	53
11	1	343378920	Air guide ring	27
12	1	310009120	Armature cpl. 240 V	58
13	1	141154350	Compensating washer	16
14	1	143114860	Ball bearing ,	22
15	1	330001630	Fan	22
16	1	341057130	GUIDER	31
17	1	143110220	BALL BEARING, 15x32x9	26
18	1	343378910	Scale	24
19	1	339131820	GUIDER	19
20	1	339011420	Butting plate	19
21	1	342003070	Tension spring	19
22	1	343379040	Clamping cap	20
23	1	339131880	Clamping lever	20
24	2	141150110	Washer	10
25	1	141113570	Cheese-head screw	12
26	1	316041420	Cut out brush set	33
27	1	343000830	Brush holder	29
28	1	343378960	Insulating plate set	22
29	1	338043590	NAME PLATE	10
30	1	315013030	Motor housing	34
31	1	342003090	Pressure spring	15
32	1	343378970	Locking bolt	18
33	1	341703630	SCREW	24
34	1	341603830	SPINDLE	48
35	1	143111450	Ball bearing, 17x35x10	20
36	1	341031820	Bearing cover	35
37	1	341703610	SCREW	22
38	1	342003050	Tension spring	19
39	1	342003060	Tension spring	19
40	1	339202850	Wheel guard	48
41	1	141155980	Shim	14

toolsspareparts.com.au

42	1	141180200	Retaining ring	12
43	1	341031830	Clamping flange	32
44	1	341031840	Clamping flange	34
45	1	141114610	Cap screw	12
46	1	339202860	Wheel guard	34
47	1	343378930	Cover	29
48	1	344101330	Cable sleeve	15
49	1	344495310	Cable with plug	38
50	1	341703650	SCREW	24
51	1	339131870	Cable clip	13
53	1	343254240	Interference suppr. cond.	21
54	1	343378990	Washer	18
55	3	141155970	Locking disc	13
56	1	315104230	Gear Cover	58
57	1	341540160	Eccentric shaft	33
58	1	143194900	O-ring	13
59	2	341520070	Thrust bolt	24
60	1	316035100	Base plate cpl.	63
61	1	343378980	Protective shield	25
62	2	6163121261	Grub screw	10
63	1	341057110	Guide rail short	29
64	1	341057090	Guide rail long	30
65	1	315415840	Swivel part	56
66	1	344096420	Bumper	19
67	1	341100970	Thumb-nut	13
68	1	141151940	Washer	10
69	1	141111560	Truss head screw	12
70	1	343378890	Swivelling segment	25
71	2	341111630	Thumbscrew	12
72	1	339131830	Clamping claw set	22
73	1	342003080	Pressure spring	22
74	1	315415830	Base plate	42
75	1	141162350	Spiral tightening pin	10
76	1	141123120	Countersunk screw	14
77	1	316035140	Dip lever joint compl.	29
78	1	141155990	Cup spring	13
79	1	343379030	Cover	22
80	1	143114740	Ball bearing, 8x22x7	22
81	1	341057140	Sleeve	27
82	1	339131840	Riving knife support	29
84	1	339131850	Riving knife	29
85	2	141113830	Cap screw	10

toolsspareparts.com.au

86	1	341111320	Handle upper part	18
87	1	141130100	Hexagonal nut	10
88	1	341111480	Handle bottom part	19
89	1	141118830	Truss head screw	10
90	1	316035120	Parallel guide	40
91	1	343379010	Exhaust nozzle	29
92	1	343378940	Cover	29
93	1	338115510	Metabo label	10
94	1	344497010	Strand set	25
95	1	344497020	Strand	21
880	1	344130170	Grease KF 010	24
1001	1	338504000	Diagram	

toolspareparts.com.au

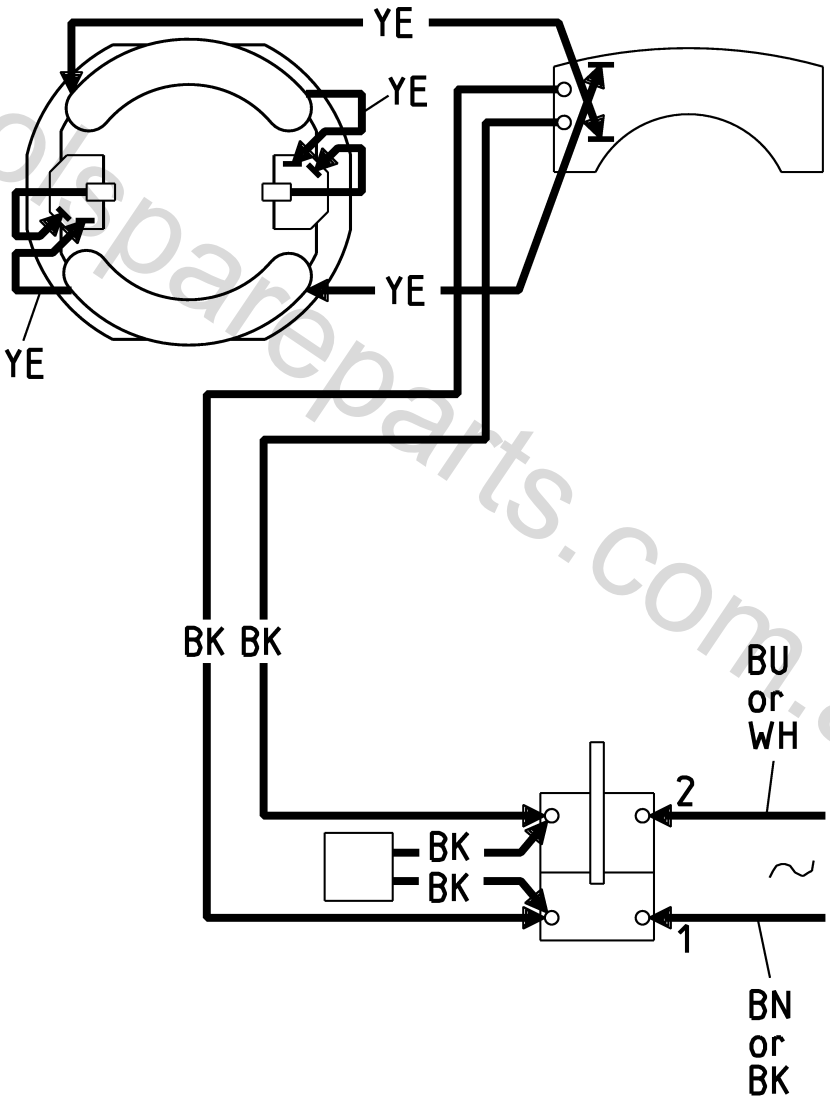

toolspareparts.com.au