metabo®

ASR 2025

02022391

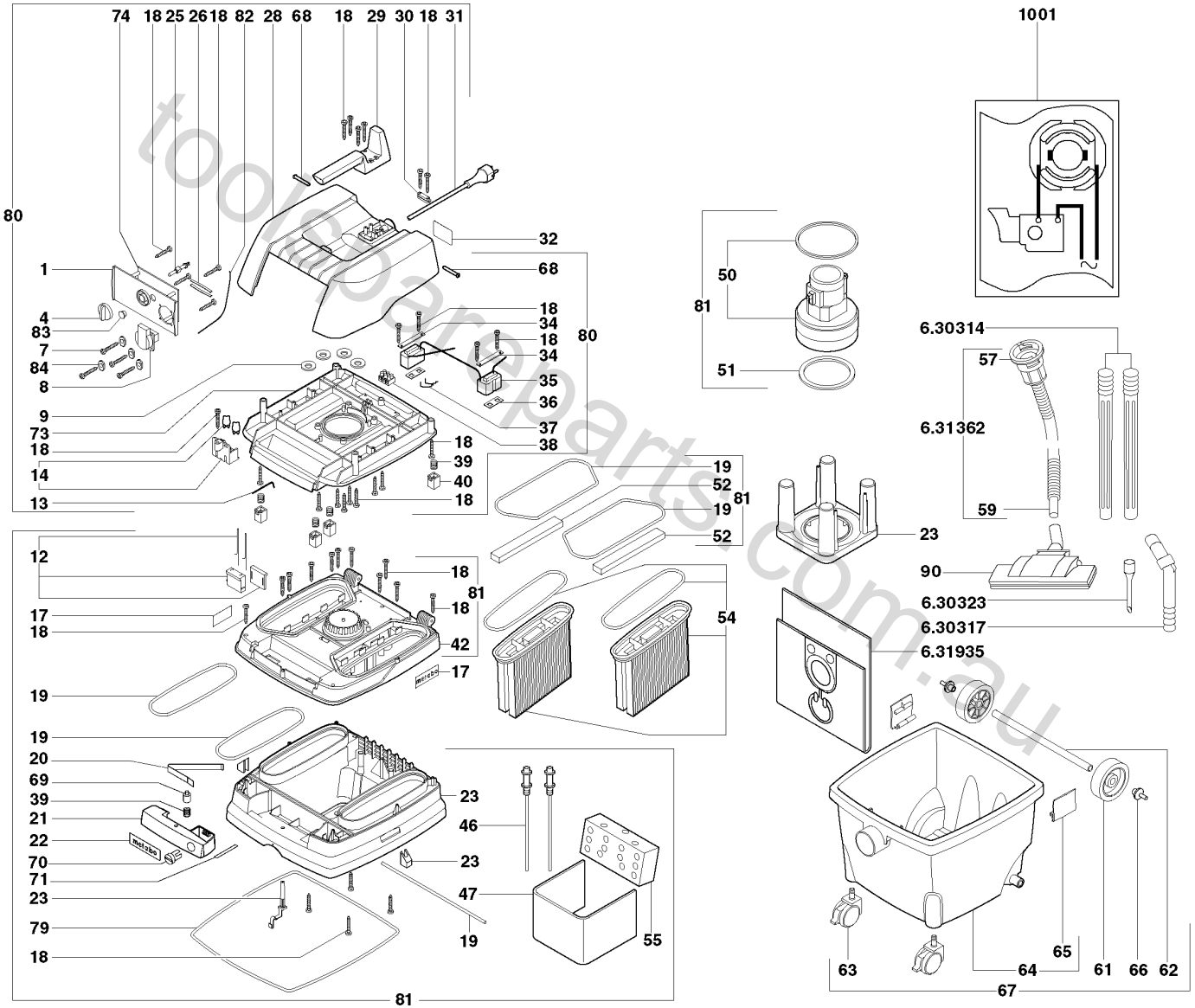

toolspareparts.com.au

metabo®

ASR 2025

02022391

Position	Amount	Type number	Description	PG
1	1	343392370	Face plate	22
4	1	343392410	Switch toggle	15
7	4	141120130	Chipboard screw	12
8	1	344494520	Socket w. screws	44
9	4	341147580	Washer	10
12	2	316034210	Motor power socket	16
13	1	339131340	Contact wire	10
14	1	316034240	Motor power plug	16
17	2	338116660	Metabo label	10
18	36	141120130	Chipboard screw	12
19	1	344096180	Foam rubber	17
20	1	342002960	Flat spring	13
21	1	343377410	Latch	18
22	1	338116680	Metabo label	10
23	1	316034200	Body compl.	44
25	1	341147570	Spindle	10
26	2	342002970	Switch spring	12
28	1	343377450	Cover	29
29	1	343377460	Handle	22
30	1	343378310	Cable clip	10
31	1	344495200	Cable with plug	39
32	1	338043060	Rating plate	10
34	2	339131680	Retraining sheet	12
35	1	343080630	Vibrator	46
36	2	344093420	Gasket	12
37	2	339131320	Contact strap	10
38	1	343050030	Terminal rail	12
39	5	342001850	Pressure spring	12
40	4	341147560	Pressure plate	10
42	1	343377390	Motor housing	33
46	2	316037940	Electrode cpl.	16
47	1	344101240	Sound damper	16
50	1	317003070	Blower	59
51	1	344093030	Sealing ring	20
52	2	344101280	Protective filter	13
54	1	631933000	Set = 2 Filter cartridges, Paper	
55	1	344101250	Sound damper	26
57	1	343373980	Hose connector	15
59	1	630798000	Extraction adapter Metabo	
61	2	343377610	Wheel	21
62	1	341514970	Spindle	25

toolsspareparts.com.au

63	2	341250120	Caster	21
64	1	316032880	Container cpl.	52
65	2	343377590	Latch	14
66	2	343369660	Plug	12
67	1	316032890	Container cpl.	55
68	2	341514990	Bearing bolt	12
69	1	341147590	Locking button	12
70	1	343378320	Locking piece	12
71	1	342021810	Spring	10
73	1	343377560	Supporting plate	34
74	1	343080620	Electronic cpl.	54
79	1	344096390	Foam rubber	15
80	1	316040020	Electronic unit	66
81	1	316034290	Motor unit	64
82	1	344096320	Vacuum hose	13
83	1	343072320	Lamp rail	21
84	4	141150010	Washer	10
90	1	343392620	Floor nozzle	22
1001	1	338504390	Diagram	

toolspareparts.com.au

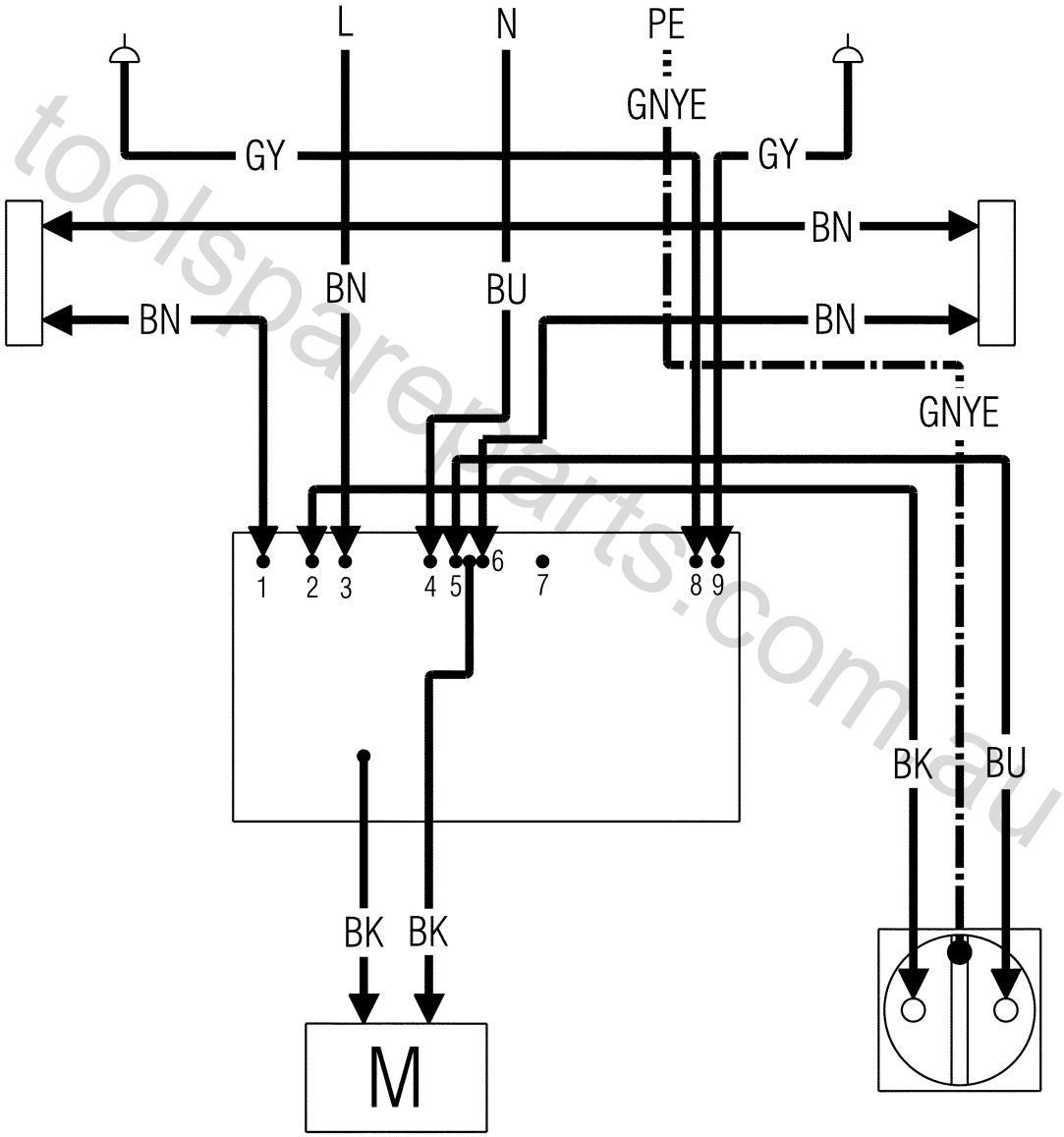

toolspareparts.com.au