Model No: 4340T

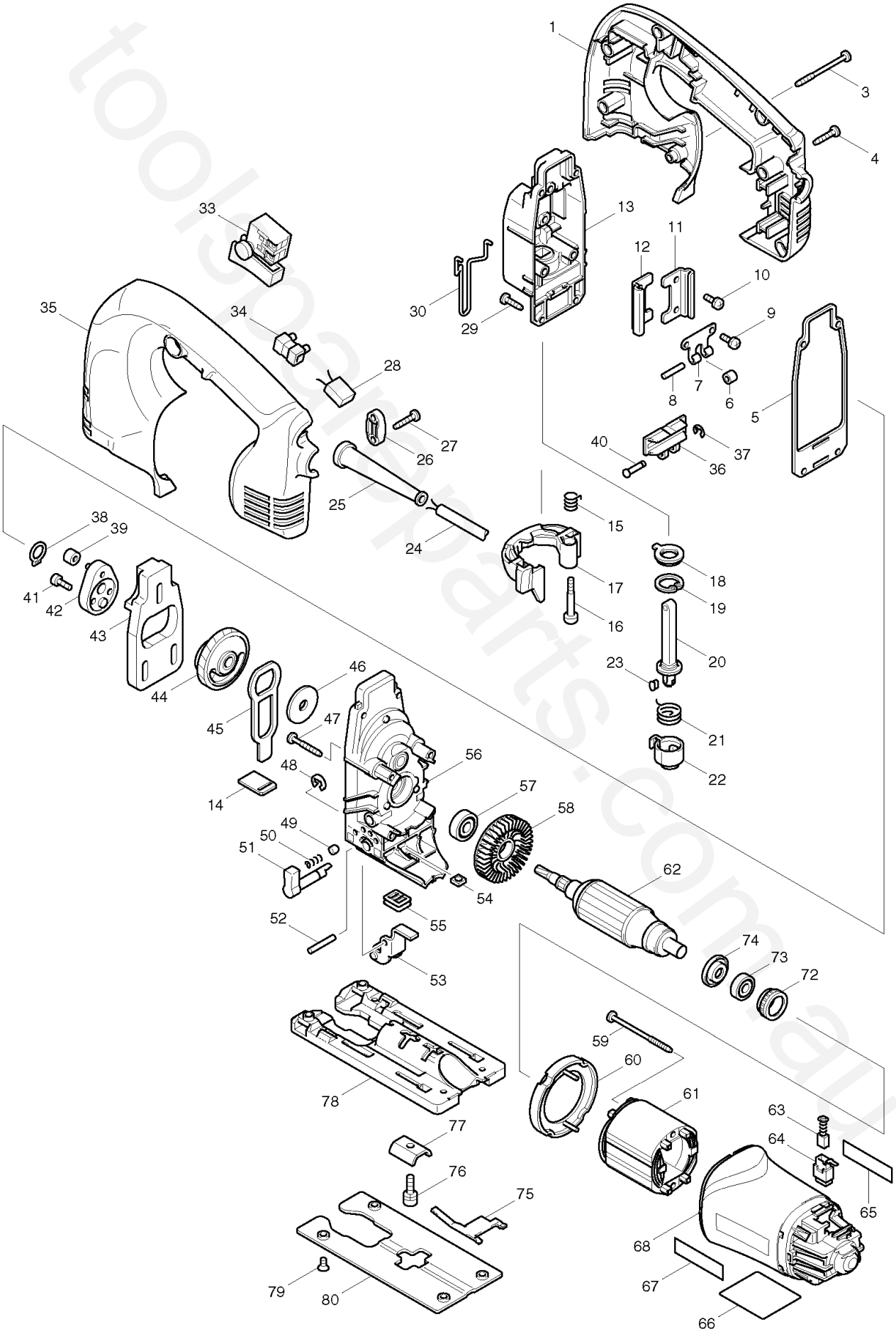

toolspareparts.com.au

Model No: 4340T

Parts List

ID	Part No	Name	Qty	Notes
1	183422-0	HANDLE SET	1	
3	266091-3	TAPPING SCREW 4X50	1	
4	265995-6	TAPPING SCREW 4X18	6	
5	442138-9	PACKING	1	
6	214031-5	PLANE BEARING 4	1	
7	232207-2	LEAF SPRING	1	
8	256117-9	PIN 4	1	
9	911111-5	PAN HEAD SCREW M4X10	2	
10	911111-5	PAN HEAD SCREW M4X10	2	
11	345240-6	LINEAR GUIDE	1	
12	345240-6	LINEAR GUIDE	1	
13	153338-3	GEAR HOUSING COVER COMPLETE	1	
14	417839-8	SEAL PLATE	1	
15	231659-4	TORSION SPRING 6	1	
16	265026-1	+ PAN HEAD SCREW M4	1	
17	417842-9	TOOL OPENER	1	
18	421817-2	DUST COVER	1	
19	962068-3	RETAINING RING R-18	1	
20	***	***	***	Click for Technical Bulletin Y04895
21	231660-9	TORSION SPRING 15	1	
22	310136-0	BLADE HOLDER	1	
23	310135-2	PUSH PIN	1	
24	666415-7	POWER SUPPLY CORD 1.0-2-2.0	1	
25	682566-8	CORD GUARD 10	1	
26	687053-2	STRAIN RELIEF	1	
27	265995-6	TAPPING SCREW 4X18	2	
28	***	***	***	Click for Technical Bulletin 69726
29	266034-5	TAPPING SCREW CT 4X16	4	
30	324233-6	SAFETY WIRE	1	
33	***	***	***	Click for Technical Bulletin 75773
34	654532-5	TERMINAL BLOCK 1P	1	
35	183422-0	HANDLE SET	1	
36	310134-4	SLIDER	1	
37	961017-7	STOP RING E-3	1	
38	961004-6	RETAINING RING S-8	1	
39	212014-9	NEEDLE BEARING 407	1	
40	268090-1	PIN 4	1	
41	265353-6	HEX. SOCKET HEAD BOLT M4X12	2	
42	153336-7	CRANK COMPLETE	1	
43	313108-4	BALANCE PLATE	1	
44	153335-9	GEAR COMPLETE	1	
45	345235-9	PUSH PLATE	1	
46	253877-4	FLAT WASHER 8	1	
47	266050-7	TAPPING SCREW 4X30	4	
48	961018-5	STOP RING E-5	1	
49	286032-3	CAP 5	1	

toolspareparts.com.au

Model No: 4340T

ID	Part No	Name	Qty	Notes
50	233139-6	COMPRESSION SPRING 3	1	
51	272244-4	LEVER 17	1	
52	268063-4	PIN 4	1	
53	153334-1	RETAINER COMPLETE	1	
54	252171-1	SQUARE NUT M5-8	1	
55	421816-4	DUST SEAL	1	
56	153337-5	GEAR HOUSING COMPLETE	1	
57	210005-4	BALL BEARING 608DDW	1	
58	241881-5	FAN 52	1	
59	266052-3	TAPPING SCREW 4X60	2	
60	417838-0	BAFFLE PLATE	1	
61	593503-6	FIELD ASS'Y 220-240V	1	
62	517394-1	ARMATURE ASS'Y 220-240V	1	
63	***	***	***	Click for Technical Bulletin 85070
64	643936-6	BRUSH HOLDER	2	
65	819063-3	MAKITA LABEL	1	
66	853853-4	NAME PLATE 4340T	1	
67	819063-3	MAKITA LABEL	1	
68	183435-1	MOTOR HOUSING	1	
72	421494-0	RUBBER RING 19	1	
73	211021-9	BALL BEARING 607LLB	1	
74	681636-0	INSULATION WASHER	1	
75	232208-0	LEAF SPRING	1	
76	922226-3	HEX. SOCKET HEAD BOLT M5X18	1	
77	345237-5	CRANK PLATE	1	
78	317565-8	BASE	1	
79	912107-9	COUNTERSUNK HEAD SCREW M4X8	4	
80	345238-3	BASE PLATE	1	
1001	415524-7	ANTI-SPLINTERING DEVICE	1	
1002	417852-6	COVER PLATE	1	
1003	***	***	***	Click for Technical Bulletin
1004	***	***	***	Click for Technical Bulletin
1005	***	***	***	Click for Technical Bulletin
1006	783202-0	HEX. WRENCH 4	1	
1007	***	***	***	Click for Technical Bulletin 80628

toolspareparts.com.au