Model No: 98202

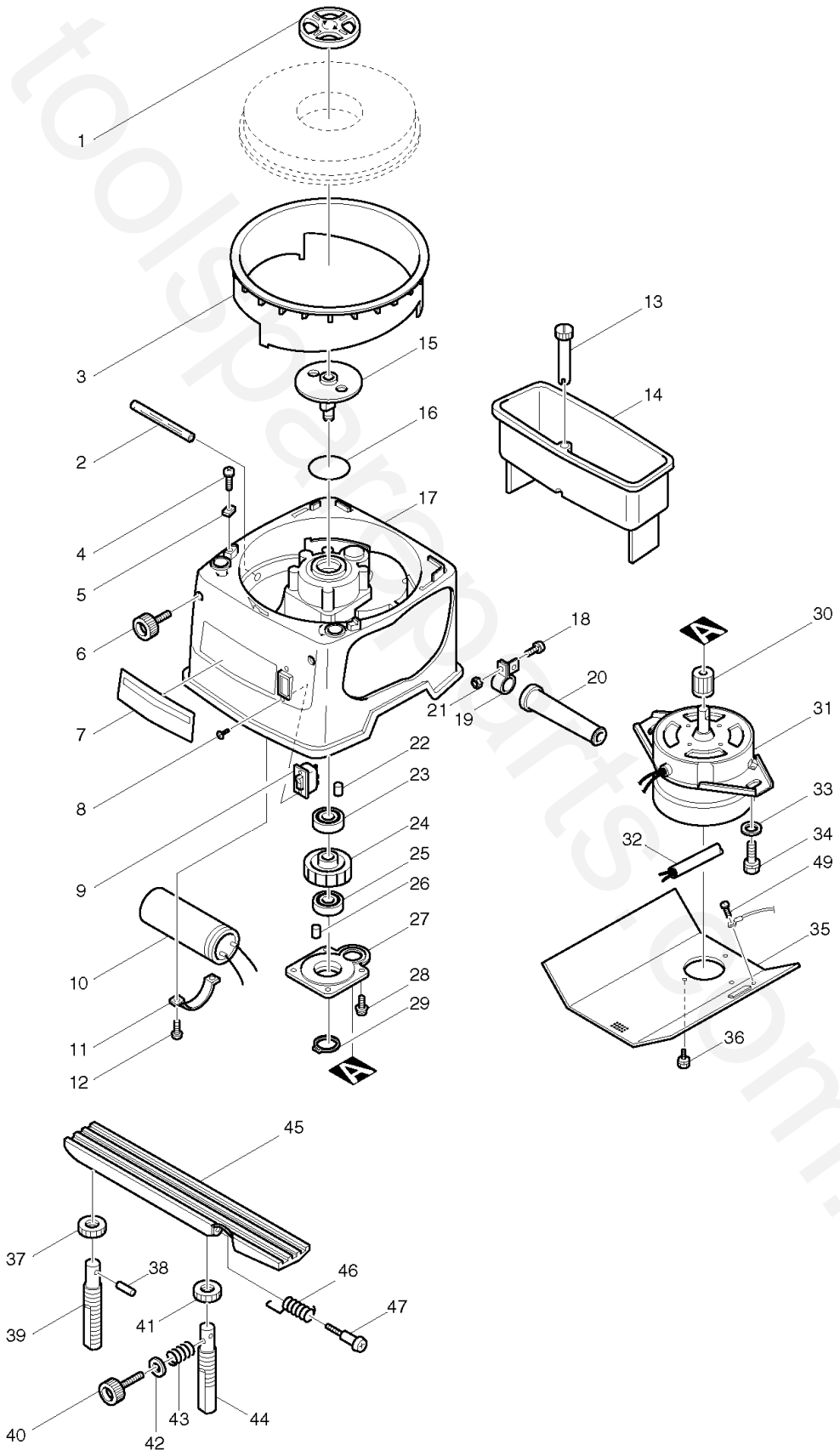

toolspareparts.com.au

Model No: 98202

Parts List

ID	Part No	Name	Qty	Notes
1	271235-2	KNOB 65	1	
2	412033-7	VINYL TUBE 8X10X100	1	
3	411429-9	WHEEL COVER	1	
4	911231-5	PAN HEAD SCREW M5X20	2	
5	341392-1	SET PLATE	2	
6	251847-7	SCREW M6X31	1	
7	854233-7	NAME PLATE 98202	1	
8	912002-3	COUNTERSUNK HEAD SCREW M3X6	2	
9	651502-5	SWITCH W115ADT-2	1	
10	***	***	***	Click for Technical Bulletin 93319
11	687629-5	CAPACITOR CLAMP	1	
12	911231-5	PAN HEAD SCREW M5X20	2	
13	271405-3	THUMB PIPE 20	1	
14	411431-2	TANK	1	
15	314087-9	SPINDLE	1	
16	213504-5	O RING 40	1	
17	151274-7	FRAME COMPLETE	1	
18	911141-6	PAN HEAD SCREW M4X22	1	
19	***	***	***	Click for Technical Bulletin
20	682502-4	CORD GUARD 8-85	1	
21	931102-0	HEX. NUT M4	1	
22	263002-9	RUBBER PIN 4	1	
23	211206-7	BALL BEARING 6202LLB	1	
24	221643-7	HELICAL GEAR 38	1	
25	211106-1	BALL BEARING 6201LLB	1	
26	263002-9	RUBBER PIN 4	1	
27	152205-9	GEAR COVER COMPLETE	1	
28	911249-6	PAN HEAD SCREW M5X28	4	
29	961052-5	RETAINING RING S-12	1	
30	221642-9	HELICAL GEAR 12	1	
31	629647-7	MOTOR 240V	1	
32	666612-5	POWER SUPPLY CORD 1.0-3-2.0	1	
33	941251-5	FLAT WASHER 10	1	
34	921551-9	HEX. BOLT M10X30	1	
35	344030-4	UNDER COVER	1	
36	***	***	***	Click for Technical Bulletin 86927
37	252619-3	WING NUT M16	1	
38	256712-5	PIN 6	1	
39	325540-0	SUB POLE	1	
40	251817-6	SCREW M6X41	1	
41	252619-3	WING NUT M16	1	
42	941151-9	FLAT WASHER 6	2	
43	231255-8	COMPRESSION SPRING 7	1	
44	325539-5	MAIN POLE	1	
45	311419-1	RAIL	1	
46	231529-7	TORSION SPRING 8	1	

toolspareparts.com.au

Model No: 98202

ID	Part No	Name	Qty	Notes
47	251271-4	+ PAN HEAD SCREW M6	1	
48	267040-3	FLAT WASHER 10	2	
49	652014-1	PAN HEAD SCREW M4X8	1	
50	931102-0	HEX. NUT M4	1	
400	251860-5	SCREW M6X71	5	
402	251814-2	SCREW M6X18	4	
403	341413-9	BLADE SET PLATE 400	1	
404	341391-3	WRENCH	1	
405	***	***	***	Click for Technical Bulletin
901	911126-2	PAN HEAD SCREW M4X16	1	

toolsspareparts.com.au