SIZE	DRAWING NUMBER
4	099979049

TOLERANCE FOR PLASTIC	
DIVISION DIMENSION	TOLERANCE (CLASS 5)
-10	±0.10
10-30	±0.15
30-50	±0.20
50-75	±0.25
75-100	±0.30
100-125	±0.35
125 150	±0.40
150-175	±0.45
175-200	±0.50
200-250	±0.60
250-315	±0.70

REVISIONS

REV	ZONE	DESCRIPTION	ECR	CHECKED
01		DESIGN RELEASE JIM 05/20/10	xxxx	xxxx

COMPUTERIZED DOCUMENT
NO MANUAL REVISION PERMITTED

PRELIMINARY

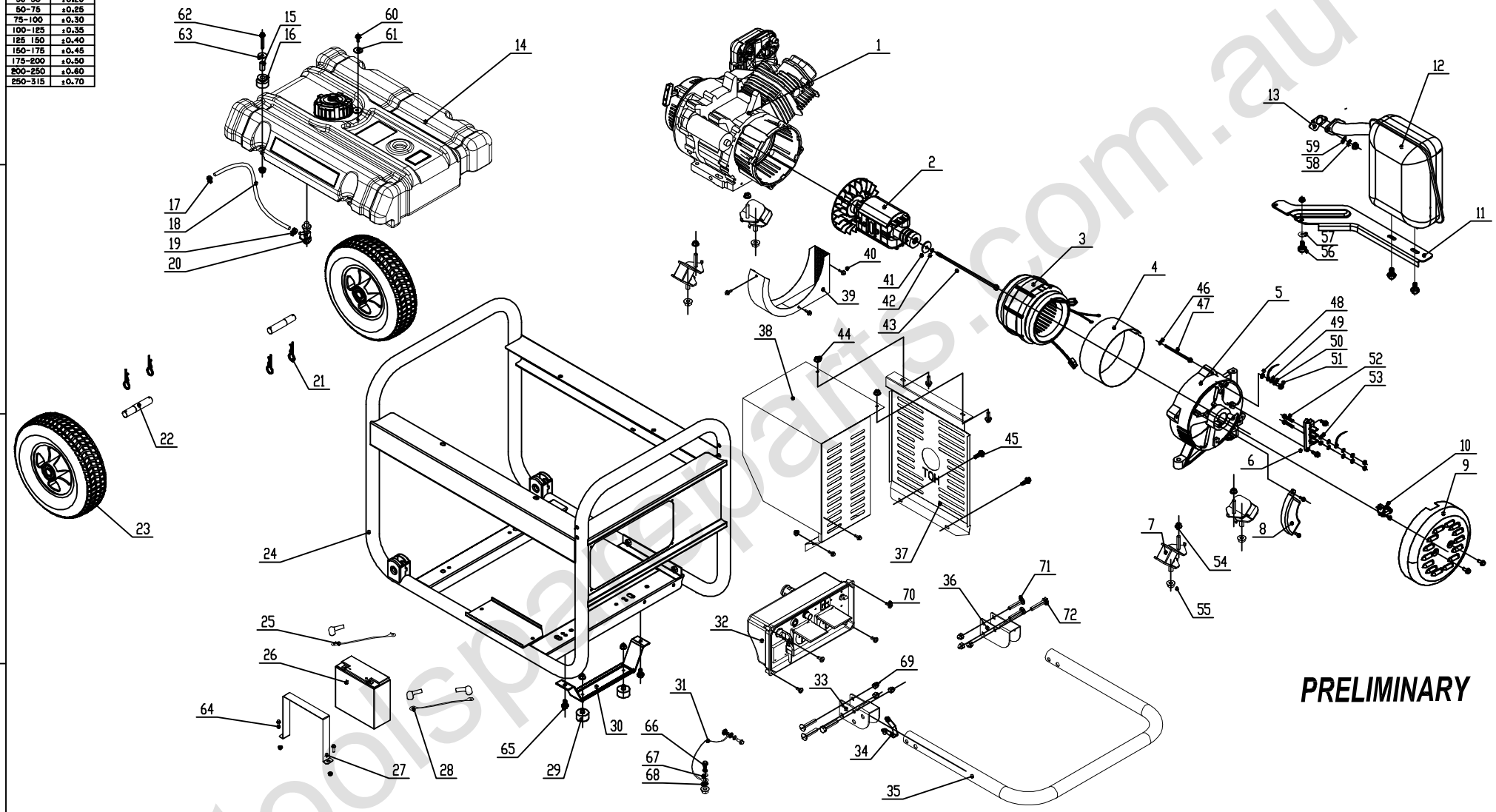

PRELIMINARY

M.S.	UNLESS OTHERWISE SPECIFIED DIMENSIONS ARE IN MILLIMETERS. FOR ALL UNSPECIFIED DIMENSIONS PLEASE REFER TO THE CAD FILE. DO NOT SCALE. USE DIMENSIONS ONLY. DIMENSION & TOLERANCE PER ASME Y14.5M-1994. THIRD ANGLE PROJECTION	DRAWN BY JIM DATE 05/20/10	TTI GROUP NORTH AMERICA
F.S.		CHECKED BY HECTOR DATE 05/20/10	TITLE AGN6000DB
DIST / PURCH/FAB		APPROVED BY HECTOR DATE 05/20/10	
"THIS DRAWING BELONGS TO TTI GROUP NORTH AMERICA. ITS CONTENTS ARE CONFIDENTIAL AND PROPRIETARY AND SHALL NOT BE DISCLOSED TO OR USED BY OR FOR OUTSIDE PARTIES WITHOUT TTI GROUP NORTH AMERICA'S WRITTEN CONSENT."		MATERIAL	SIZE 4 / DRAWING NUMBER 099979049 / REV 01
			SCALE / SHEET 1 OF 1

toolspareparts.com.au