ISSUED	REVISION	NP/ECO	ZONE	CHG BY DATE	CHK & APP DATE
A	RELEASE FOR REFERENCE				

CUSTOMER/MODEL : AEG BMS 18C
EXPLODE DRAWING OF 010524
DESCRIPTION: MINI RECIP-SAWL
DATE : 17.Dec.09
DRAWN BY: Danielle.guo
APP. BY : Robin.Liu
PAGE 1 OF 1

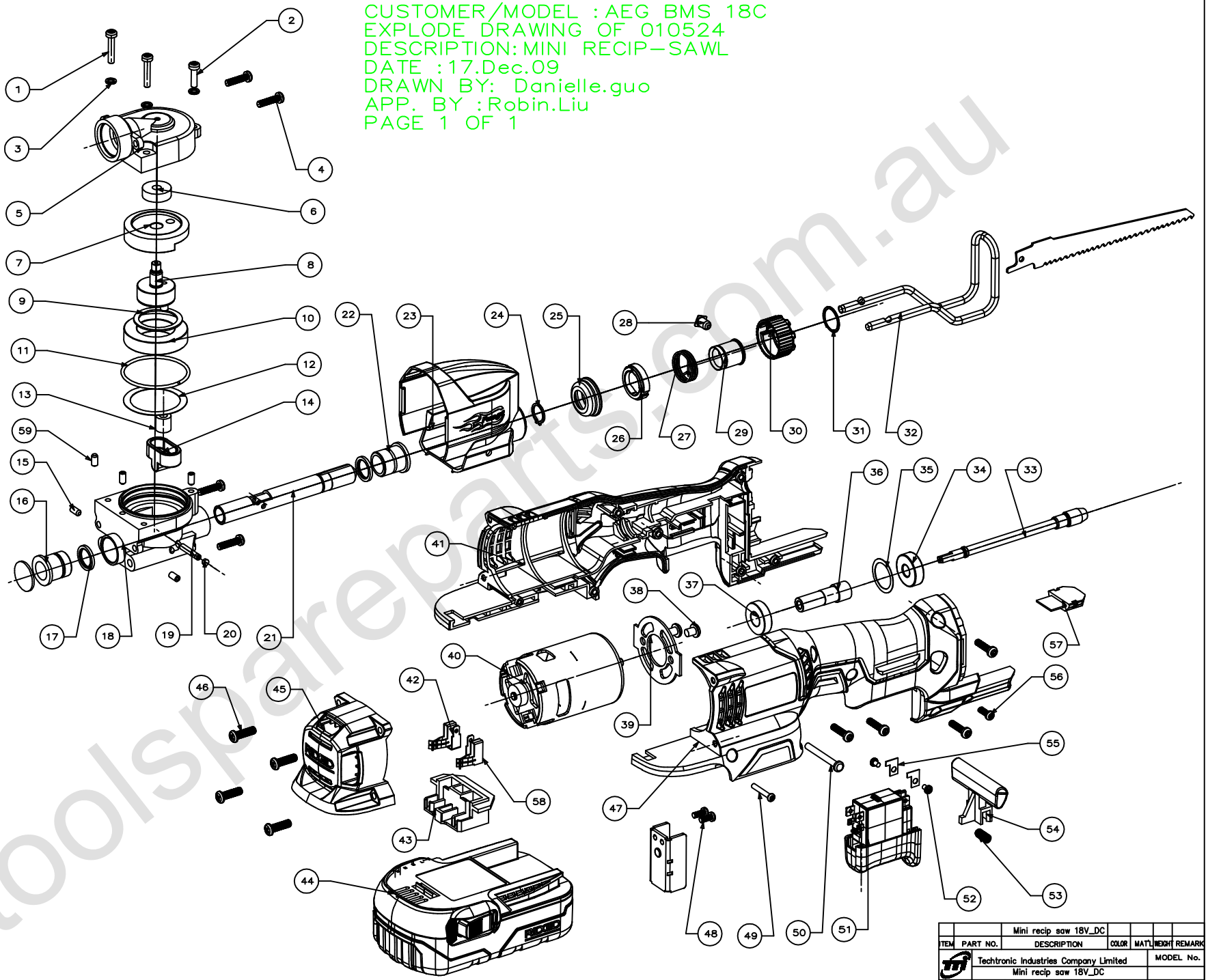

ITEM	PART NO.	DESCRIPTION	COLOR	MAT'L	WEIGHT	REMARK
		Mini recip saw 18V_DC				

Techtronic Industries Company Limited
Mini recip saw 18V_DC

MODEL No.

MAT'L	DWN BY	QA APP BY	SCALE
RELEASE STATUS	FINISH/ TREATMENT	CHK BY	ALL DIMENSIONS IN mm	SHEET OF
TEXTURE NO:	COLOR	APP BY	CAD FILE DWG NO.	A1

toolspareparts.com.au