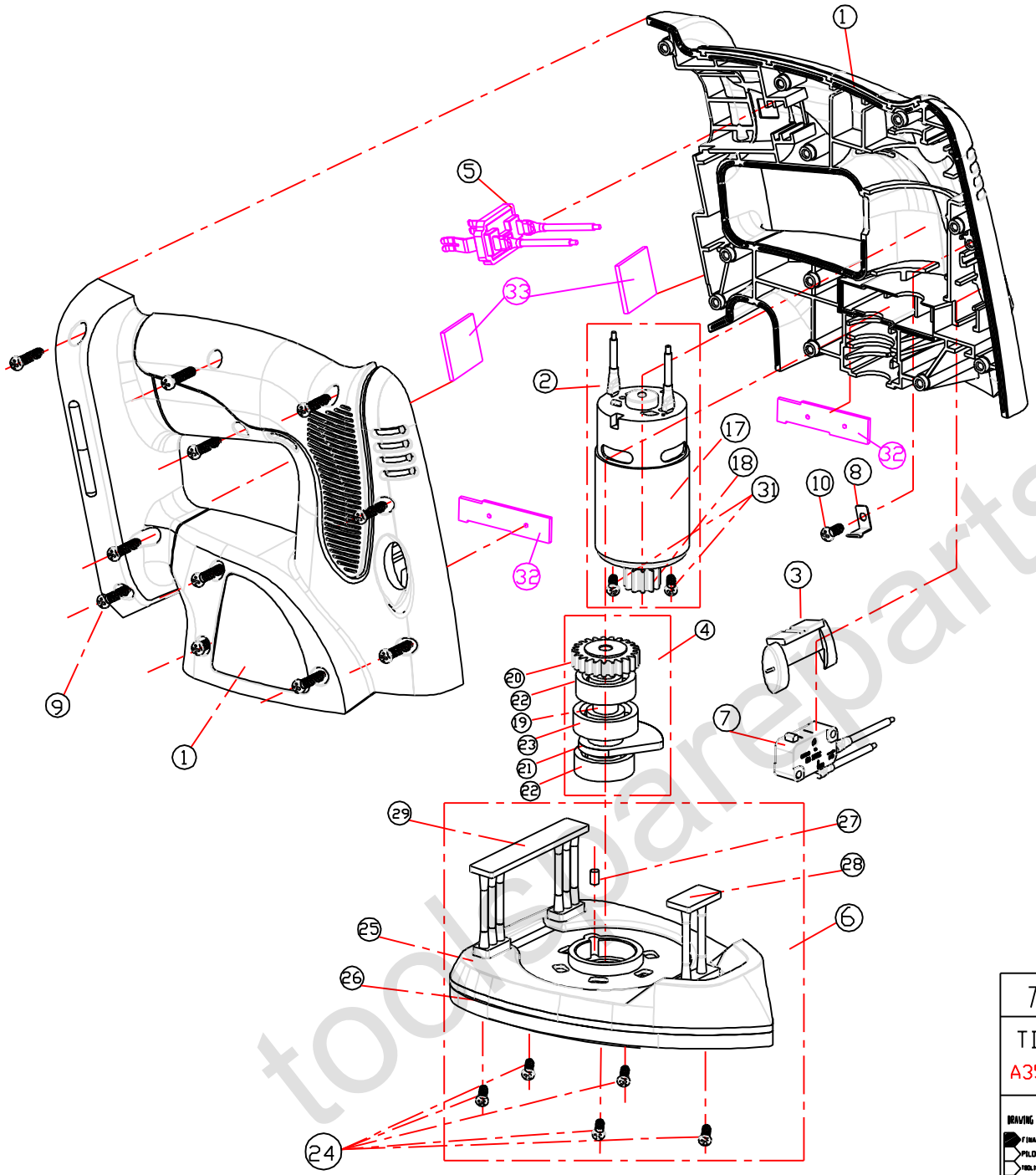

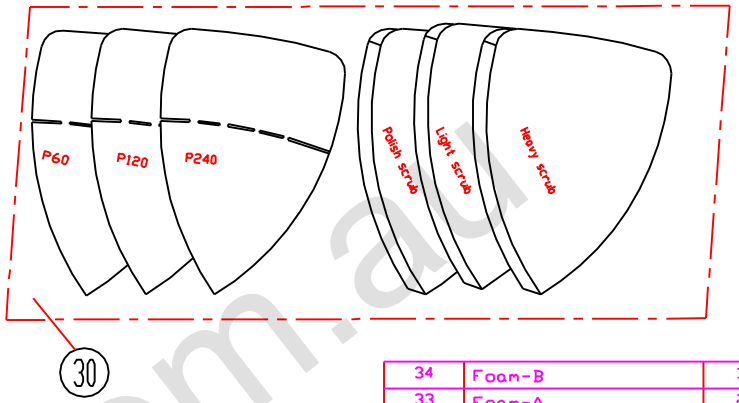

ITEM	NAME	QTY
34	Foam-B	1
33	Foam-A	2
32	Plastic plate	2
31	Screw(T3x4)	2
30	Accessories	1
29	Cushion support(area)	1
28	Cushion support(front)	1
27	Rubber pin	1
26	Platen support	1
25	Platen cover	1
24	S/T screw Ø4*8	9
23	Bearing B	1
22	Bearing A	2
21	Eccentric wheel	1
20	Spur gear	1
19	Output shaft	1
18	Motor pinion	1
17	Motor	1
10	S/T screw Ø3*8	1
9	Self tape Screw Ø3.5*15	11
8	Sping plate	1
7	Micro Switch assembly	1
6	Platen assembly	1
5	Contact plate assembly	1
4	Shaft assembly	1
3	Switch BUTTON	1
2	Motor assembly	1
1	housing assembly	1

TOPLINK INDUSTRIAL CO, LTD.

MODEL NO.: A-356

TITLE: A356/TL-271 exploded drawing(SAA)

DRAWN BY: Merlin Lo

DATE: 02/Jun/05

CHECKED BY:

DATE:

APPROVED BY:

DATE:

PART NO.:

DWG. NO.:

MAT'L:

FINISH:

SHEET 1 OF 1

ISSUE 04

SCALE

DRAWING RELEASED FOR
- FINAL PRODUCTION;
- PILOT PRODUCTION;
- TOOLING MODIFICATION;
- NEW TOOLING;
- QUOTATION & SAMPLE;
- DESIGN GUIDE;

DO NOT SCALE DRAWING

UNLESS OTHERWISE SPECIFIED DIMENSION ARE IN MM
TOLERANCES ARE:
2 DECIMALS +/-0.05
1 DECIMALS +/-0.1
ANGLE +/-0.5

QUANTITY:

toolsbareparts.com.au