| ISSUED | REVISION | NP/ECO | ZONE | CHG BY DATE | CHK & APP DATE |
|---|---|---|---|---|---|
| A | RELEASE FOR REFERENCE | | | | |

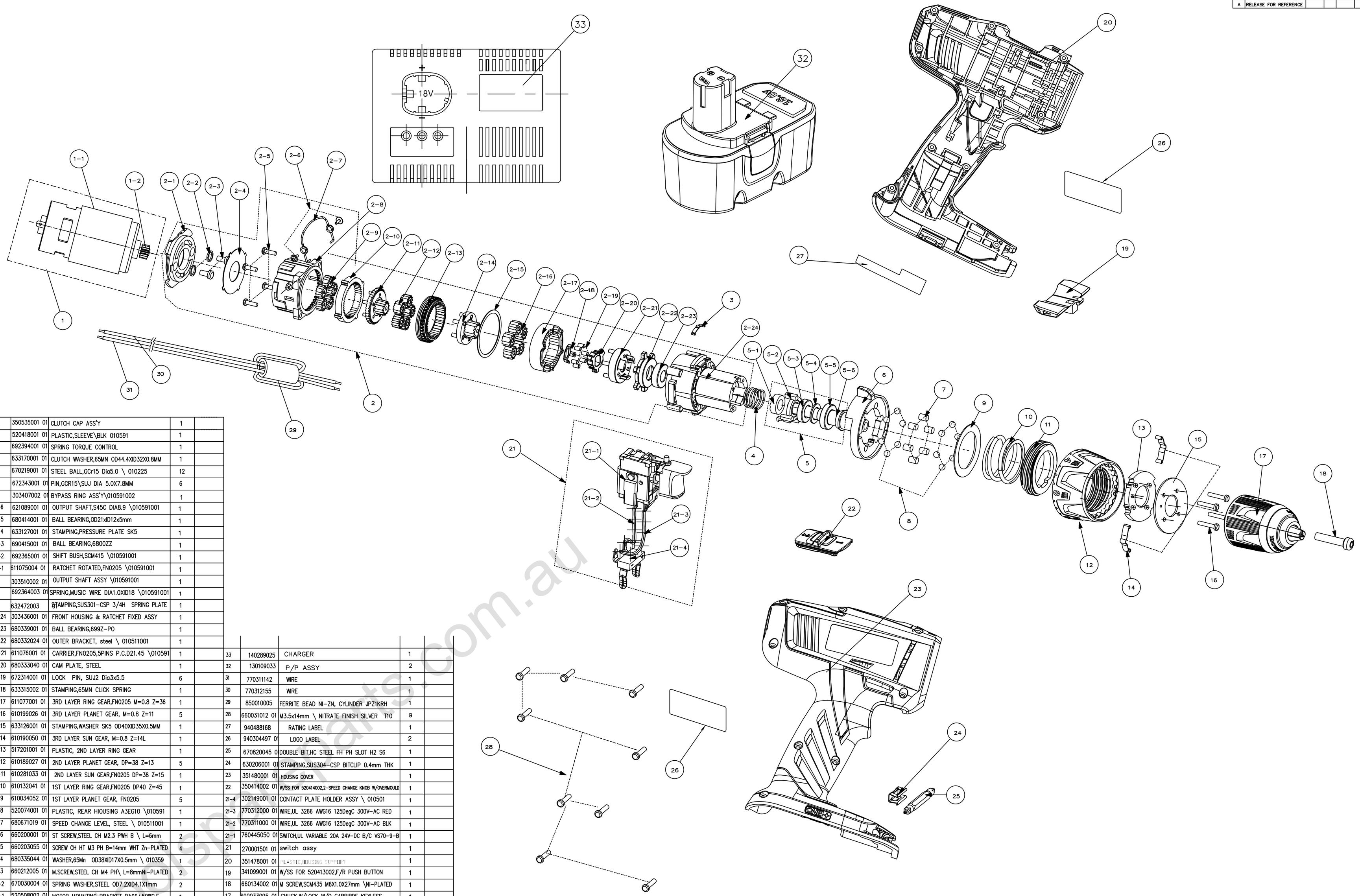


| ITEM | P/N | DESCRIPTION | QTY | REMARK |
|---|---|---|---|---|
| 12 | 350535001 01 | CLUTCH CAP ASS'Y | 1 | |
| 11 | 520418001 01 | PLASTIC,SLEEVE\BLK 010591 | 1 | |
| 10 | 692394001 01 | SPRING TORQUE CONTROL | 1 | |
| 9 | 633170001 01 | CLUTCH WASHER,65MN OD44.4XID32X0.8MM | 1 | |
| 8 | 670219001 01 | STEEL BALL,GCr15 Dia5.0 \ 010225 | 12 | |
| 7 | 672343001 01 | PIN,GCR15\SUJ DIA 5.0X7.8MM | 6 | |
| 6 | 303407002 01 | BYPASS RING ASS'Y\010591002 | 1 | |
| 5-6 | 621089001 01 | OUTPUT SHAFT,S45C DIA8.9 \010591001 | 1 | |
| 5-5 | 680414001 01 | BALL BEARING,OD21xID12x5mm | 1 | |
| 5-4 | 633127001 01 | STAMPING,PRESSURE PLATE SK5 | 1 | |
| 5-3 | 690415001 01 | BALL BEARING,6800ZZ | 1 | |
| 5-2 | 692365001 01 | SHIFT BUSH,SCM415 \010591001 | 1 | |
| 5-1 | 611075004 01 | RATCHET ROTATED,FN0205 \010591001 | 1 | |
| 5 | 303510002 01 | OUTPUT SHAFT ASSY \010591001 | 1 | |
| 4 | 692364003 01 | SPRING,MUSIC WIRE DIA1.0XID18 \010591001 | 1 | |
| 3 | 632472003 | STAMPING,SUS301-CSP 3/4H SPRING PLATE | 1 | |
| 2-24 | 303436001 01 | FRONT HOUSING & RATCHET FIXED ASSY | 1 | |
| 2-23 | 680339001 01 | BALL BEARING,699Z-PO | 1 | |
| 2-22 | 680332024 01 | OUTER BRACKET, steel \ 010511001 | 1 | |
| 2-21 | 611076001 01 | CARRIER,FN0205,5PINS P.C.D21.45 \010591 | 1 | |
| 2-20 | 680333040 01 | CAM PLATE, STEEL | 1 | |
| 2-19 | 672314001 01 | LOCK PIN, SUJ2 Dia3x5.5 | 6 | |
| 2-18 | 633315002 01 | STAMPING,65MN CLICK SPRING | 1 | |
| 2-17 | 611077001 01 | 3RD LAYER RING GEAR,FN0205 M=0.8 Z=36 | 1 | |
| 2-16 | 610199026 01 | 3RD LAYER PLANET GEAR, M=0.8 Z=11 | 5 | |
| 2-15 | 633126001 01 | STAMPING,WASHER SK5 OD40XID35X0.5MM | 1 | |
| 2-14 | 610190050 01 | 3RD LAYER SUN GEAR, M=0.8 Z=14L | 1 | |
| 2-13 | 517201001 01 | PLASTIC, 2ND LAYER RING GEAR | 1 | |
| 2-12 | 610189027 01 | 2ND LAYER PLANET GEAR, DP=38 Z=13 | 5 | |
| 2-11 | 610281033 01 | 2ND LAYER SUN GEAR,FN0205 DP=38 Z=15 | 1 | |
| 2-10 | 610132041 01 | 1ST LAYER RING GEAR,FN0205 DP40 Z=45 | 1 | |
| 2-9 | 610034052 01 | 1ST LAYER PLANET GEAR, FN0205 | 5 | |
| 2-8 | 520074001 01 | PLASTIC, REAR HIOUSING A3EG10 \010591 | 1 | |
| 2-7 | 680671019 01 | SPEED CHANGE LEVEL, STEEL \ 010511001 | 1 | |
| 2-6 | 660200001 01 | ST SCREW,STEEL CH M2.3 PWH B \ L=6mm | 2 | |
| 2-5 | 660203055 01 | SCREW CH HT M3 PH B=14mm WHT Zn-PLATED | 4 | |
| 2-4 | 680335044 01 | WASHER,65Mn OD38XID17X0.5mm \ 010359 | 1 | |
| 2-3 | 660212005 01 | M.SCREW,STEEL CH M4 PH\ L=8mmNi-PLATED | 2 | |
| 2-2 | 670030004 01 | SPRING WASHER,STEEL OD7.2XID4.1X1mm | 2 | |
| 2-1 | 520508002 01 | MOTOR MOUNTING BRACKET PA66+50%G.F. | 1 | |
| 2 | 220123003 01 | GB ASSY | 1 | |
| 1-2 | 610447031 01 | Motor pinion | 1 | |
| 1-1 | 741100002 01 | MOTOR | 1 | |
| 1 | 230311002 01 | MOTOR ASS'Y | 1 | |

| ITEM | P/N | DESCRIPTION | QTY | REMARK |
|---|---|---|---|---|
| 33 | 140289025 | CHARGER | 1 | |
| 32 | 130109033 | P/P ASSY | 2 | |
| 31 | 770311142 | WIRE | 1 | |
| 30 | 770312155 | WIRE | 1 | |
| 29 | 850010005 | FERRITE BEAD NI-ZN, CYLINDER JPZ1KRH | 1 | |
| 28 | 660031012 01 | M3.5x14mm \ NITRATE FINISH SILVER T10 | 9 | |
| 27 | 940488168 | RATING LABEL | 1 | |
| 26 | 940304497 01 | LOGO LABEL | 2 | |
| 25 | 670820045 01 | DOUBLE BIT,HC STEEL FH PH SLOT H2 S6 | 1 | |
| 24 | 630206001 01 | STAMPING,SUS304-CSP BITCLIP 0.4mm THK | 1 | |
| 23 | 351480001 01 | HOUSING COVER | 1 | |
| 22 | 350414002 01 | W/SS FOR 520414002,2-SPEED CHANGE KNOB W/OVERMOULD | 1 | |
| 21-4 | 302149001 01 | CONTACT PLATE HOLDER ASSY \ 010501 | 1 | |
| 21-3 | 770312000 01 | WIRE,UL 3266 AWG16 125DegC 300V-AC RED | 1 | |
| 21-2 | 770311000 01 | WIRE,UL 3266 AWG16 125DegC 300V-AC BLK | 1 | |
| 21-1 | 760445050 01 | SWITCH,UL VARIABLE 20A 24V-DC B/C VS70-9-B | 1 | |
| 21 | 270001501 01 | switch assy | 1 | |
| 20 | 351478001 01 | PLASTIC,HOUSING SUPPORT | 1 | |
| 19 | 341099001 01 | W/SS FOR 520413002,F/R PUSH BUTTON | 1 | |
| 18 | 660134002 01 | M SCREW,SCM435 M6X1.0X27mm \Ni-PLATED | 1 | |
| 17 | 590033095 01 | CHUCK,W/LOCK W/O CARBIRDE KEYLESS | 1 | |
| 16 | 660203049 01 | ST SCREW,STEEL CH M3 PH B \ L=16mm | 4 | |
| 15 | 633568001 01 | STAMPING,SPCC MOUNTING PLATE FOR CLUTCH CAP | 1 | |
| 14 | 633169002 01 | STAMPING,SUS301-CSP-3/4H SPRING PLATE | 2 | |
| 13 | 522533001 01 | spring holder | 1 | |

techspareparts.com.au

Techtronic Industries Co. Ltd.

| | | | |
|---|---|---|---|
| TITLE 2-SPEED COMPACT HAMMER DRILL | | MODEL NO. 010099002 | |
| | DWN BY JY.HE | DO NOT SCALE DRAWING | SCALE 1:1 |
| | CHK BY Colin Liu | ALL DIMENSIONS IN mm | SHEET OF |
| | APP BY Body Li | CAD FILE DWG NO. | A0 |