CRH1801M Hammer drill Explode Drawing

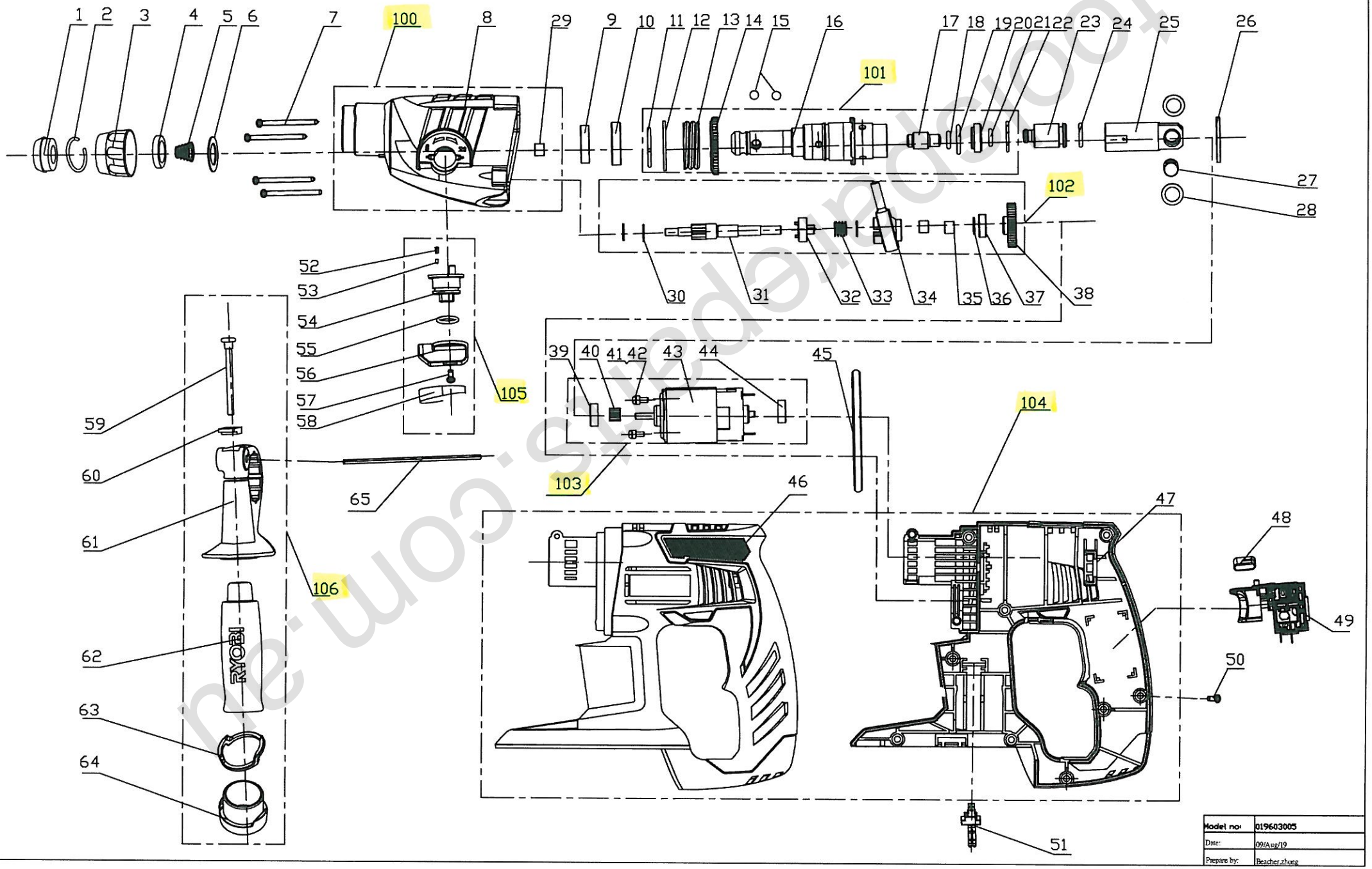

Model no:	019603005
Date:	09/Aug/19
Prepare by:	Beacher.zhong

ne-woo-shedepartts.com