EBS8076F 3X21 Belt Sander Exploded Drawing

REV: 01
Updated: 10/Jul,2006

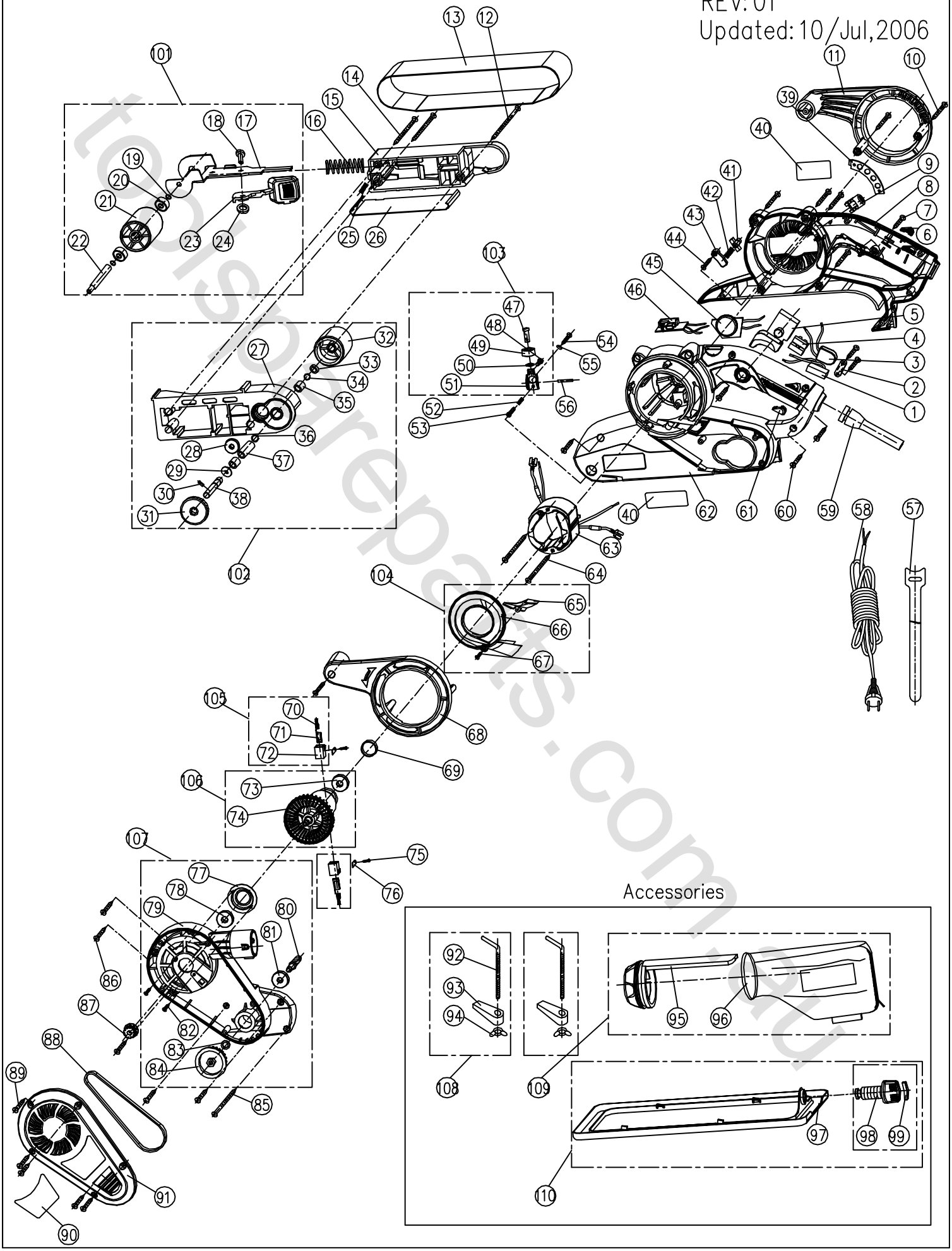

tools-spareparts.com.au