ITEM	LEVEL	CUSTOMER P/N	TTA PART NO.	PRO-E MODEL NAME	DESCRIPTION	MATERIAL	QTY
1			760424002 01	SWITCH_NEW	SWITCH,PUSH BOT,250V BA BLK W/RED ACTUATOR		1
2			566314001 01	FOAM_SEAL	FOAM_SEAL		1
3			312886005 01	F159_TOP_COVER_JD	PLASTIC, MOTOR COVER UPPER\BLACK		1
4			561195001 01	F159_CORD_BEND_RELIEF	CABLE STRAIN RELIEF\BLACK		1
5			730546006 00	B126_POWERCORD	POWER CORD,VE H05VV-F 3G 1.0mm^2 2500mm NA BLK W/SL-E PLUG		1
6			668203002 01	6620202	ST SCREW, STEEL CH M3 PH B L=12mm NI-PLATED		1
7		0106312	510368011 01	B877_CABLE_CLIP	CABLE CLIP	CARBON STEEL	2
8			050095001 01	F159_CHOKE	CHOKE, 25mH model L-C25-103	PC LEXAN 141	1
9			660201014 01	6622001	MSCREW, STEEL CH M2.6 PH B L=6mm NI-PLATED		1
10			280017001 04	F159_PCB	PCB ASSY	CARBON STEEL	2
11			790024001 01	SHRINK_TUBE	SHRINK TUBE 1# 3mSmm\BLK ROHS		1
12			512985002 01	F159_MOTOR_LOWER_COVER	PLASTIC, MOTOR COVER/BLK		1
13			668207002 01	6620702	ST SCREW, STEEL CH #8 PH +-HEAD B L=3/4" BLK Zn-PLATED	CARBON STEEL	6
14			561197002 01	F159_FOAM_GASKET_REF	FOAM GASKET \ INNER TANK W / DOUBLE SIDE TAPE		1
15			740713005 01	B126_MOTOR_ASSY_UL	MOTOR 220-240V-AC 50HZ 119861-00 1300W AMETEK 020126018		1
16			820825001 01	CAP-ASM	CAPACITOR		2
17			511293001 01	B126_VALVE_COVER	VALVE COVER/BLK		1
18			511301004 01	B126_TANK_LATCH	PLASTIC,LATCH TANK/RYOBI YELLOW		2
19			511287002 01	F159_TANK_LID	PLASTIC,TANK LID 12&16 GAL\BLK		1
20			511276004 01	B126_VALVE_DOOR	PLASTIC, VALVE DOOR/RYOBI YELLOW		1
21			561078001 01	B138_16G_LID_TANK_SEAL	FOAM SEAL W/WATER RESISTANT DOUBLE-SIDE TAPE,L=1370MM		1
22			660207012 01	6620703	ST SCREW, STEEL CH #8 PH +-HEAD B L=1" BLK Zn-PLATED	CARBON STEEL	9
23			561154001 01	B138_FLOAT_BALL_SEAL	RUBBER,FLOAT BALL SEAL		4
24			512677001 01	B138_FLOAT_BALL_SEAL_CLIP	PLASTIC,FLOAT BALL SEAL RETAINER		2
25			660207001 01	6620701	ST SCREW, STEEL CH #8 PH +-HEAD B L=1/2" BLK Zn-PLATED	CARBON STEEL	1
26			580429002 02	B138_FLOAT_BALL	BLDW MOLD,FLOAT BALL/BLK,DIA63MM,WEIGHT5RG		5
27			511280001 01	B126_FILTER_SUPPORT	PLASTIC, FILTER SUPPORT\BLK		2
28			300067001 03	B126_CARTRIDGE_FILTER	CARTRIDGE FILTER		1
29			511302004 01	B138_DRAIN_CAP	PLASTIC, DRAIN CAP\RYOBI YELLOW		1
30			561063001 01	B138_DRAIN_CAP_SEAL	DRAIN CAP SEAL/DIA 47MM THK 2MM		1
31			512998002 02	F159_CASTER_SUPPORT_STANDARD	PLASTIC,CASTER SUPPORT STANDARD/BLK		1
32			301234001 01	F159_CASTER_W-SHROUDER	CASTER ASSY/BLK		2
33			660716001 01	6607160001	ST SCREW, 10#-12X1/4"PWASH L=31.75cm	CARBON STEEL	4
34			511297002 02	F159_CASTER_SUPPORT_DELUXE	F159_CASTER_SUPPORT_DELUXE/BLK	PPAV161	4
35			511281003 01	B126_CLEANER_TANK_16-S	PLASTIC,TANK 16GAL\RYOBI BLUE		1
36			511279003 01	B126_FLOAT_RETAINER	PLASTIC,FLOAT RETAINER\BLK\RYOBI BLUE		1
37			512759003 01	B139_INNER_TANK_BALL_SEAL_CLIP	PLASTIC,FLOAT BALL SEAL RETAINER,INNER TANK\BLUE		1
38			511278003 01	B126_INNER_TANK	PLASTIC, INNER TANK\RYOBI BLUE		1
39			561088001 01	B138_SMALL_FOAM_FILTER	SMALL FOAM FILTER/7620138		1
40			561060001 01	B138_INNER_TANK_GASKET	FOAM GASKET W/DOUBLE SIDE TAPE		1
41			561337001 01	SWITCH_SPLASHPROOF_COVER	SWITCH SPLASHPROOF COVER \ TRSP		1

TTA REVISION BLOCK					
ISSUE	REVISION	ZONE	NP/ECO	CHG BY DATE	RHK & APP DATE
A	REL.FOR TOOLING				
B	REL.FOR PRODUCTION				

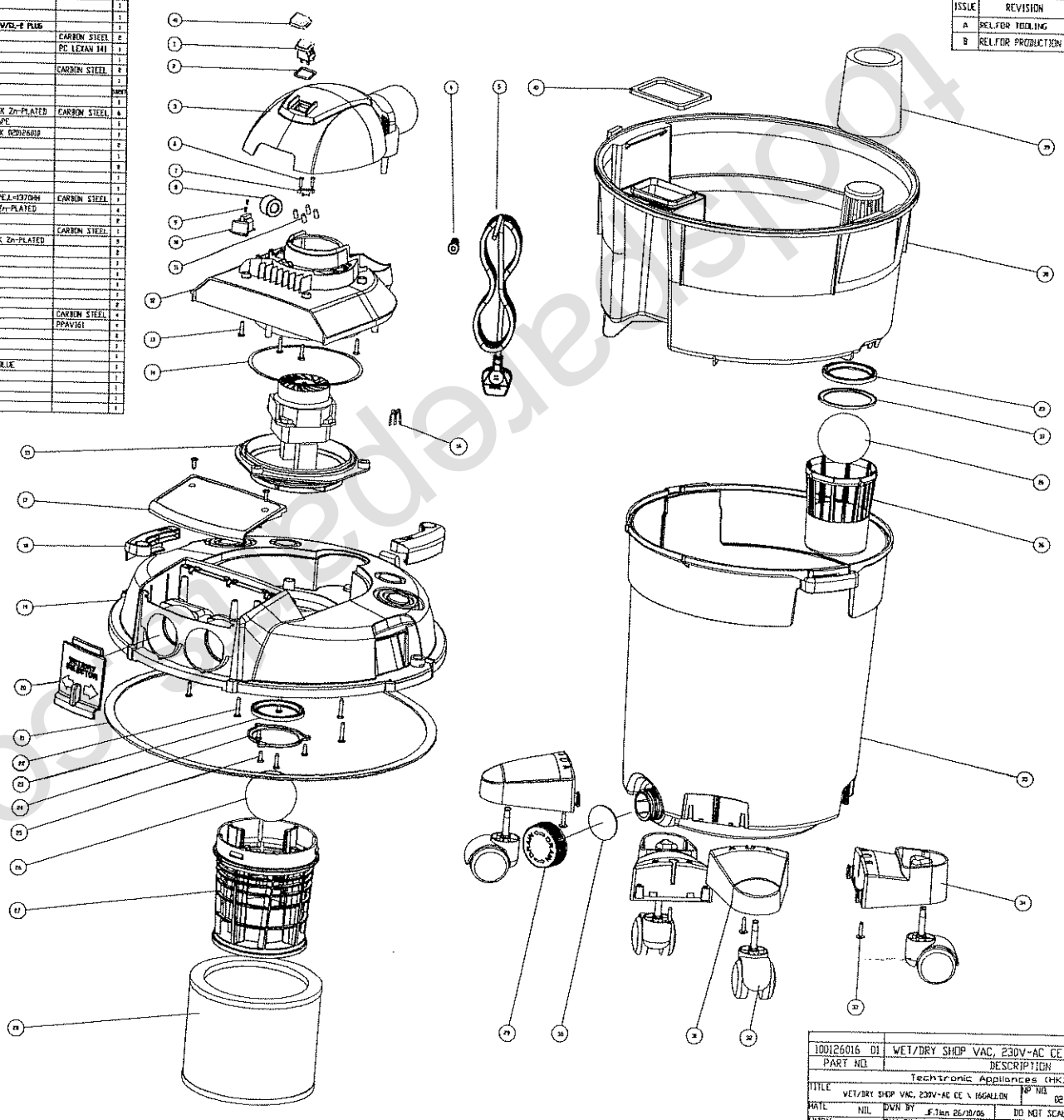

100126016 01	WET/DRY SHOP VAC, 230V-AC CE \ 16GALLON		
PART NO.	DESCRIPTION		REMARK
Techtronic Appliances (HK) Ltd.			
TITLE WET/DRY SHOP VAC, 230V-AC CE \ 16GALLON		P/N NO. 020126016	REL. LEVEL Detail Design RL
DATE NIL	DWN BY J.Tian 26/10/06	DO NOT SCALE DRAWING	SCALE 1:2
DWG/SP DRAWING NIL	CHK BY J.Guo 26/10/06	DIMENSIONS mm/inch	SHEET 1 OF 1
COLOR NIL	APP BY Harry 26/10/06	DWG NO. 100126016 CAD FILE B126_WET_DRY_VAC_CONSOLE_16G	A0

toolservicepartsbook.com.au