ITEM	OTHER P/N	TTA PART NO.	PRO-E MODEL NAME	DESCRIPTION	MATERIAL	QTY
1		760424002 01	SWITCH_NEW	SWITCH,PUSH BOT,250V BA BLK W/RED ACTUATOR		1
2		561314001 01	FOAM_SEAL	FOAM_SEAL		1
3		512826005 01	F159_TOP_COVER_JB	PLASTIC, MOTOR COVER UPPER\BLACK		1
4		561195001 01	F159_CORD_RENO_RELIEF	CABLE STRAIN RELIEF\BLACK		1
5		730544006 03	B126_POWERCORD	POWER CORD\VDE H05VV-F 3G 1.0mm^2 750mm NA BLK W/CL-2 PLUG		1
6		660203002 01	660203002	ST SCREW, STEEL CH HD PH B L=12mm N-PLATED	CARBON STEEL	2
7	0106312	519368011 01	B977_CABLE_CLIP	CABLE CLIP	PC LEXAN 141	1
8		850095001 01	F159_CHOKE	CHOKE, 2.5mH min(5%) I.025-100		1
9		660201014 01	6620101	MSCREW, STEEL CH M26 PH B L=6mm N-PLATED	CARBON STEEL	2
10		280012001 04	F159_PCB	PCB ASSY		1
11		700004001 01	SHRINK_TUBE	SHRINK TUBE 4X, 8to5mm\BLK MEMS		1MOR
12		512825002 01	F159_MOTOR_COVER_COVER	PLASTIC, MOTOR COVER/BLK		1
13		660207002 01	6620702	ST SCREW, STEEL CH #8 BH +-HEAD B L=3/4" BLK Zn-PLATED	CARBON STEEL	4
14		561197002 01	F159_FOAM_GASKET_REF	FOAM GASKET \ INNER TANK W / DOUBLE SIDE TAPE		1
15		740730005 01	B126_MOTOR_ASSY_UL	MOTOR 220-240V-AC SDMZ 119861-00 1300W AMETEK 020126009		1
16		820835001 01	CAP-ASM	CAPACITOR		2
17		511259001 01	B126_VALVE_COVER	VALVE COVER/BLK		1
18		511301004 01	B126_TANK_LATCH	PLASTIC,LATCH TANK/RYOBI YELLOW		4
19		511287002 01	F159_TANK_LID	PLASTIC,TANK LID 12&16 GAL\BLK.		1
20		511276004 01	B126_VALVE_DOOR	PLASTIC, VALVE DOOR/RYOBI YELLOW		1
21		561078001 01	B139_16G_LID_TANK_SEAL	FOAM SEAL W/WATER RESISTANT DOUBLE-SIDE TAPE\L=1370MM	CARBON STEEL	1
22		660207013 01	6620703	ST SCREW, STEEL CH #8 BH +-HEAD B L=1" BLK Zn-PLATED		4
23		561154001 01	B139_FLOAT_BALL_SEAL	RUBBER,FLOAT BALL SEAL		2
24		512677001 01	B139_FLOAT_BALL_SEAL_CLIP	PLASTIC,FLOAT BALL SEAL RETAINER	CARBON STEEL	1
25		660207008 01	6620708	ST SCREW, STEEL CH #8 BH +-HEAD B L=1/2" BLK Zn-PLATED		5
26		560429002 02	B139_FLOAT_BALL	INJEV MOLD,FLOAT BALL,BLK,D368.5MM,WEIGHT52G		2
27		511280001 01	B126_FILTER_SUPPORT	PLASTIC, FILTER SUPPORT\BLK		1
28		300867001 03	B126_CARTRIDGE_FILTER	CARTRIDGE FILTER		1
29		511313004 01	B139_DRAIN_CAP	PLASTIC, DRAIN CAP\RYOBI YELLOW		1
30		561003001 01	B139_DRAIN_CAP_SEAL	DRAIN CAP SEAL/DIA 47MM THIK 2MM		1
31		511298002 02	F159_CASTER_SUPPORT_STANDARD	PLASTIC,CASTER SUPPORT STANDARD/BLK		2
32		301234001 01	F159_CASTER_W-SHOULDER	CASTER ASSY/BLK	CARBON STEEL	4
33		660716001 01	6607160N	ST SCREW, 10M-12X1.3/4"PWHF L=31.75cm	PPAV161	4
34		511297002 02	F159_CASTER_SUPPORT_DELUXE	F159_CASTER_SUPPORT_DELUXE/BLK		2
35		511281003 01	B126_CLEANER_TANK_16-S	PLASTIC,TANK 16GAL\RYOBI BLUE		1
36		511279003 01	B126_FLOAT_RETAINER	PLASTIC,FLOAT RETAINER\RYOBI BLUE		1
37		512759003 01	B139_INNER_TANK_BALL_SEAL_CLIP	PLASTIC,FLOAT BALL SEAL RETAINER,INNER TANK\BLUE		1
38		511278003 01	B126_INNER_TANK	PLASTIC, INNER TANK\RYOBI BLUE		1
39		561088001 01	B139_SMALL_FOAM_FILTER	SMALL FOAM FILTER/020138		1
40		561082001 01	B139_INNER_TANK_GASKET	FOAM GASKET W/DOUBLE SIDE TAPE		1
41		561337001 01	SWITCH_SPLASHPROOF_COVER	SWITCH SPLASHPROOF COVER \ TRSP		1

TTA REVISION			
ISSUE	REVISION	ZONE	
A	REL.FOR TOOLING		
B	REL.FOR PRODUCTION		

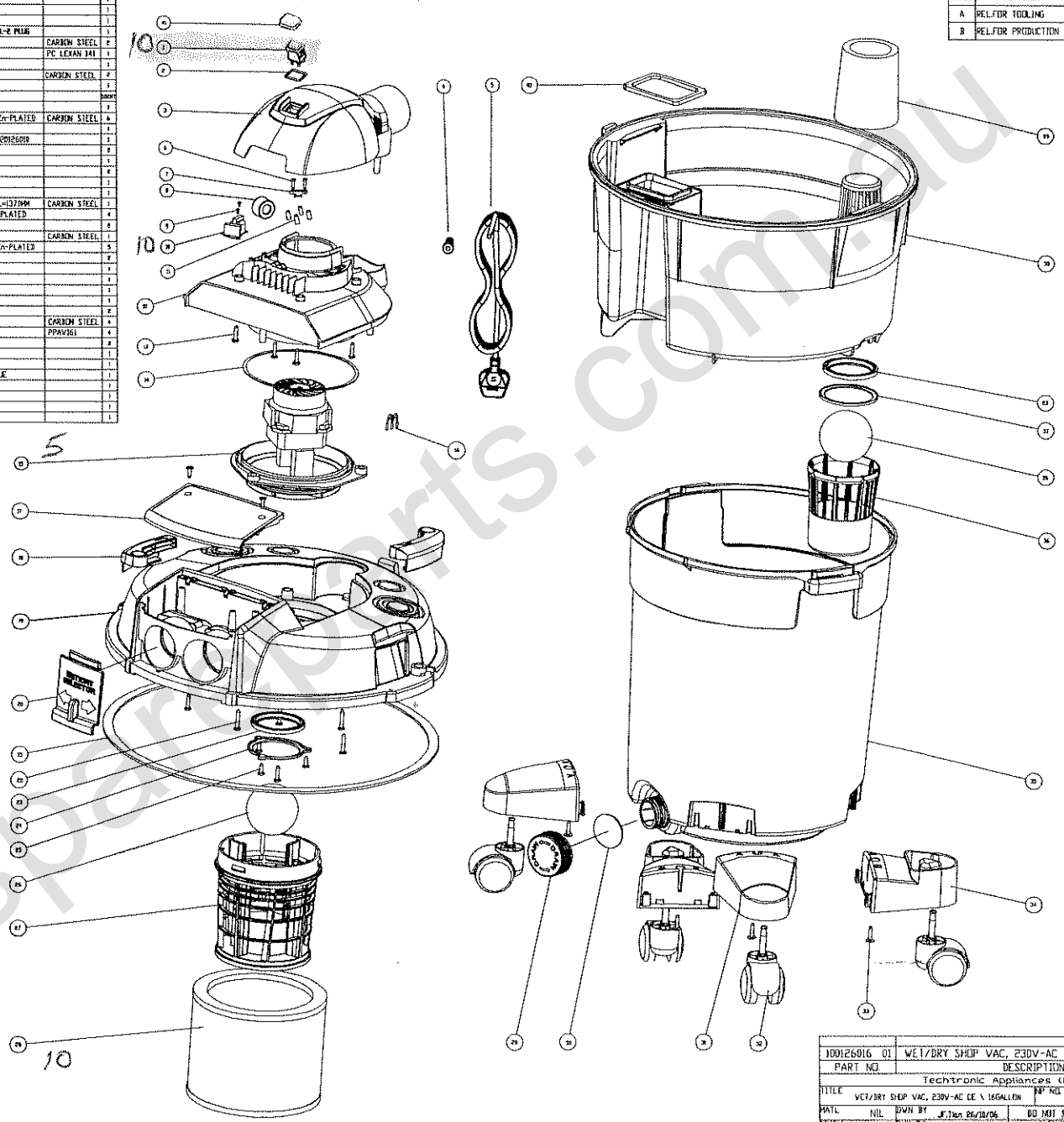

100126016 01	WET/DRY SHOP VAC, 230V-AC CE \ 16GALL		
PART NO.	DESCRIPTION		
Techtronic Appliances (HK) Ltd.			
TITLE	WET/DRY SHOP VAC, 230V-AC CE \ 16GALLON	MP NO.	020126016
MATL	NIL	DWN BY	F.Tian 26/10/06
FINISH	NIL	CHK BY	Jeffrey 26/10/06
COLOR	NIL	APP BY	Harry 26/10/06
DO NOT SCALE DRAWING			
DIMENSIONS MM/INCH			
DWG NO. Weihaw			
CAD FILE B126_WET_DRY_VAC			

toolspartsparts.com.au