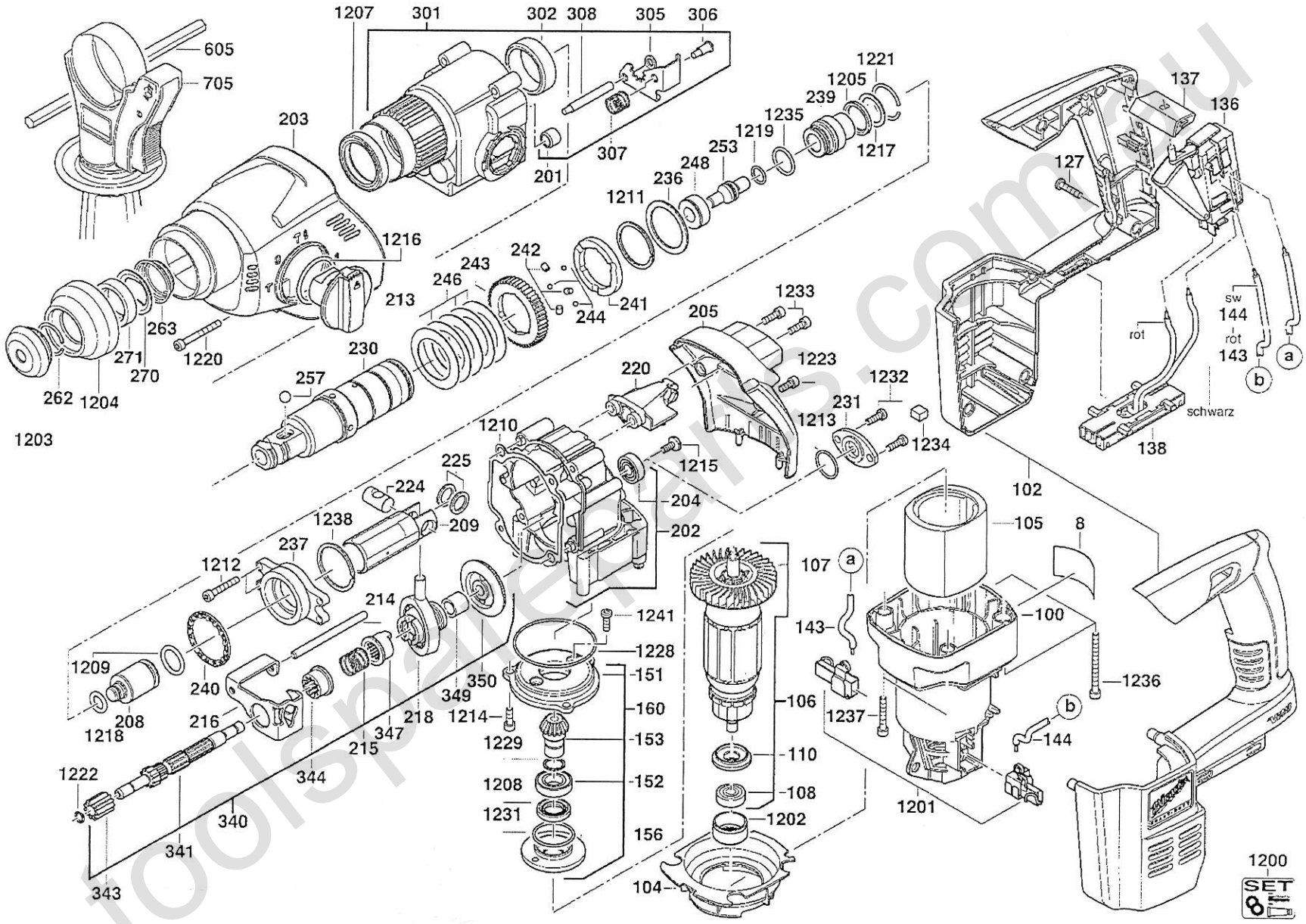

Product 4000415601 Type **HD28H** Voltage **28V** Country *** Exp.view No. **4926415523**

A & M Electric Tools GmbH

V4.7a (2011/03)

toolspareparts.com.au