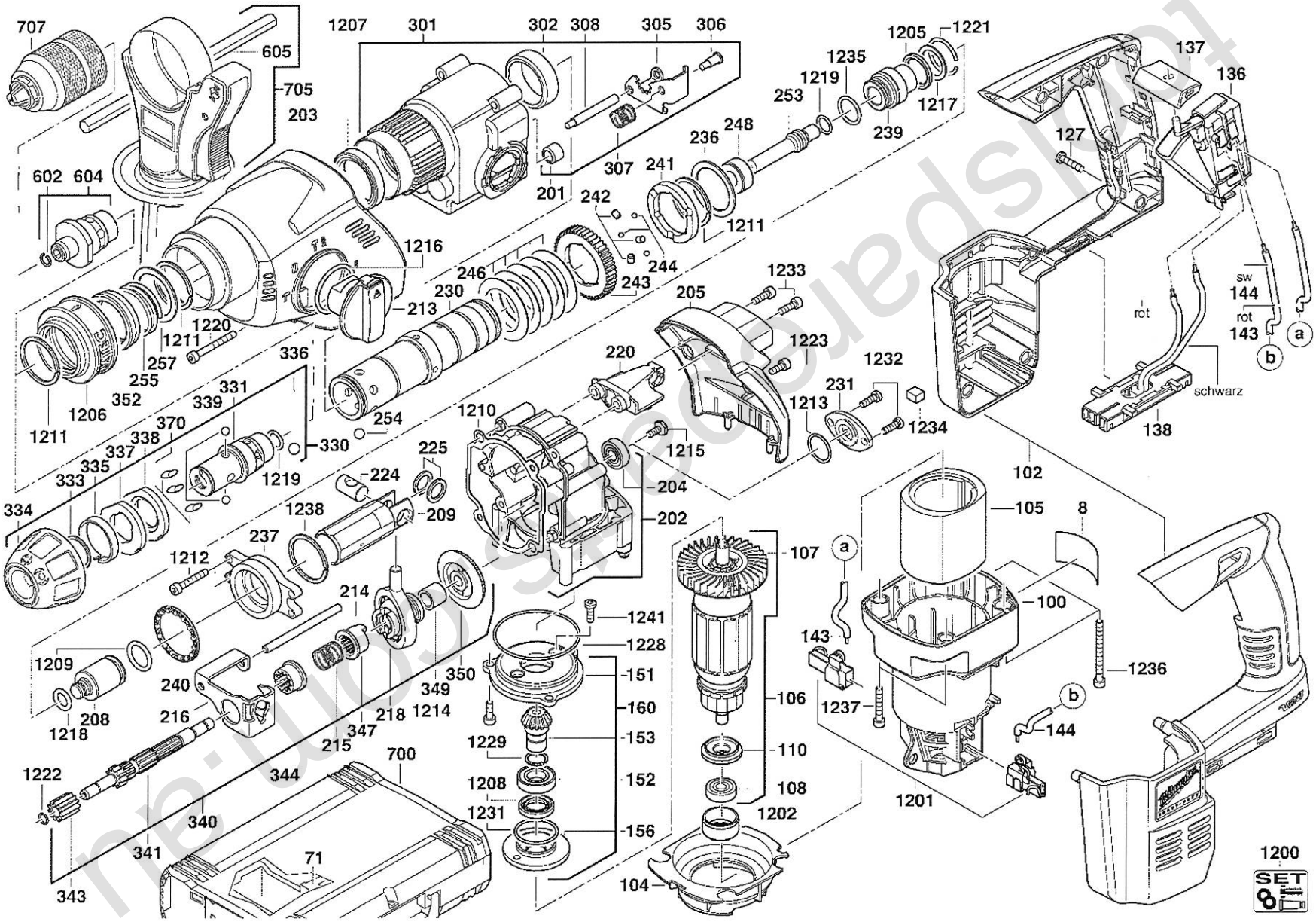

Product	**4000415501**	Type **HD28HX**		Voltage **28V**		Country ***	Exp.view No. **4926415525**

A & M Electric Tools GmbH **V4.7a (2011/03)**