UP154(UP90)零部件配置表

3. CRANKSHAFT, PISTON, CONNECTING, CAMSHAFT ASSY & FLYWHEEL ASSY

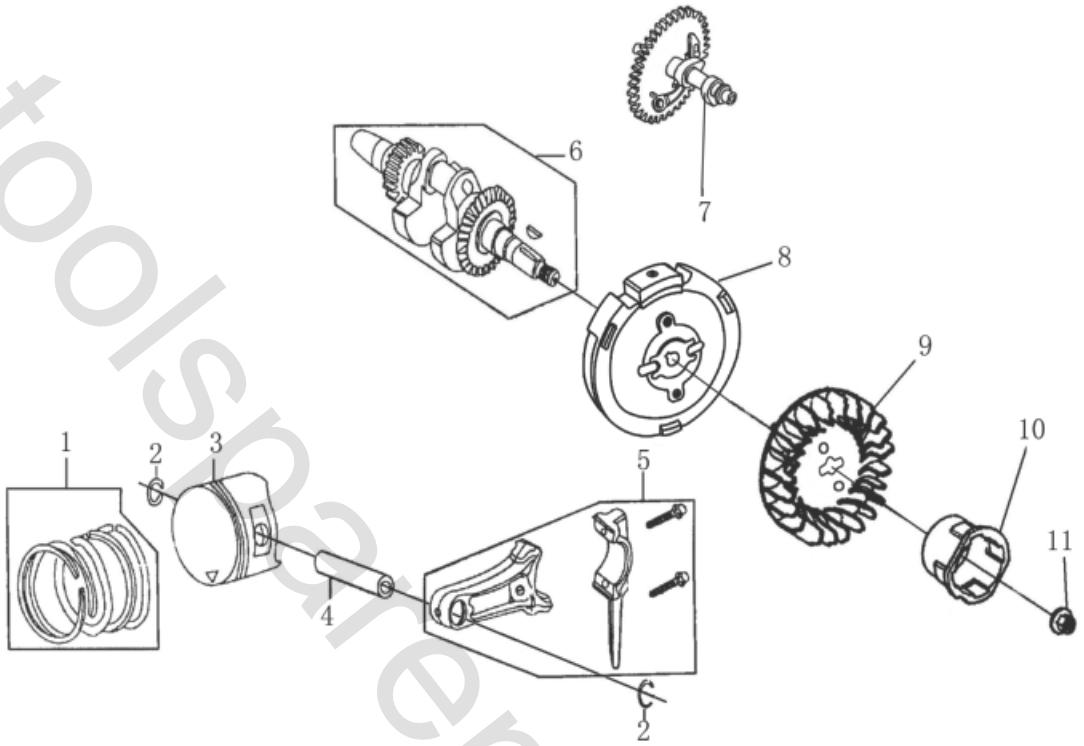

Drawing Reference No:	TTI NO	DESCRIPTION	QTY.
1	099980087001	Piston ring set	1
2	099980087002	Piston pin circlip	2
3	099980087003	piston	1
4	099980087004	Piston pin	1
5	099980087005	Connect rod assy	1
6	099980087006	Cranshaft assy	1
7	099980087007	Camshaft assy	1
8	099980087008	Flywheel	1
9	099980087009	Flywheel fan	1
10	099980087010	Starting flange	1
11	099980087011	Nut M12×1.5	1

toolsparepartscom.au