ISSUED	REVISION	NP/ECO	ZONE	CHG BY DATE	CHK & APP DATE
A	RELEASE FOR REFERENCE				

LCDI1802(010591002/3) SPARE PARTS LIST

Prepared By: Dragon.Ye
Date: Aug.19.09

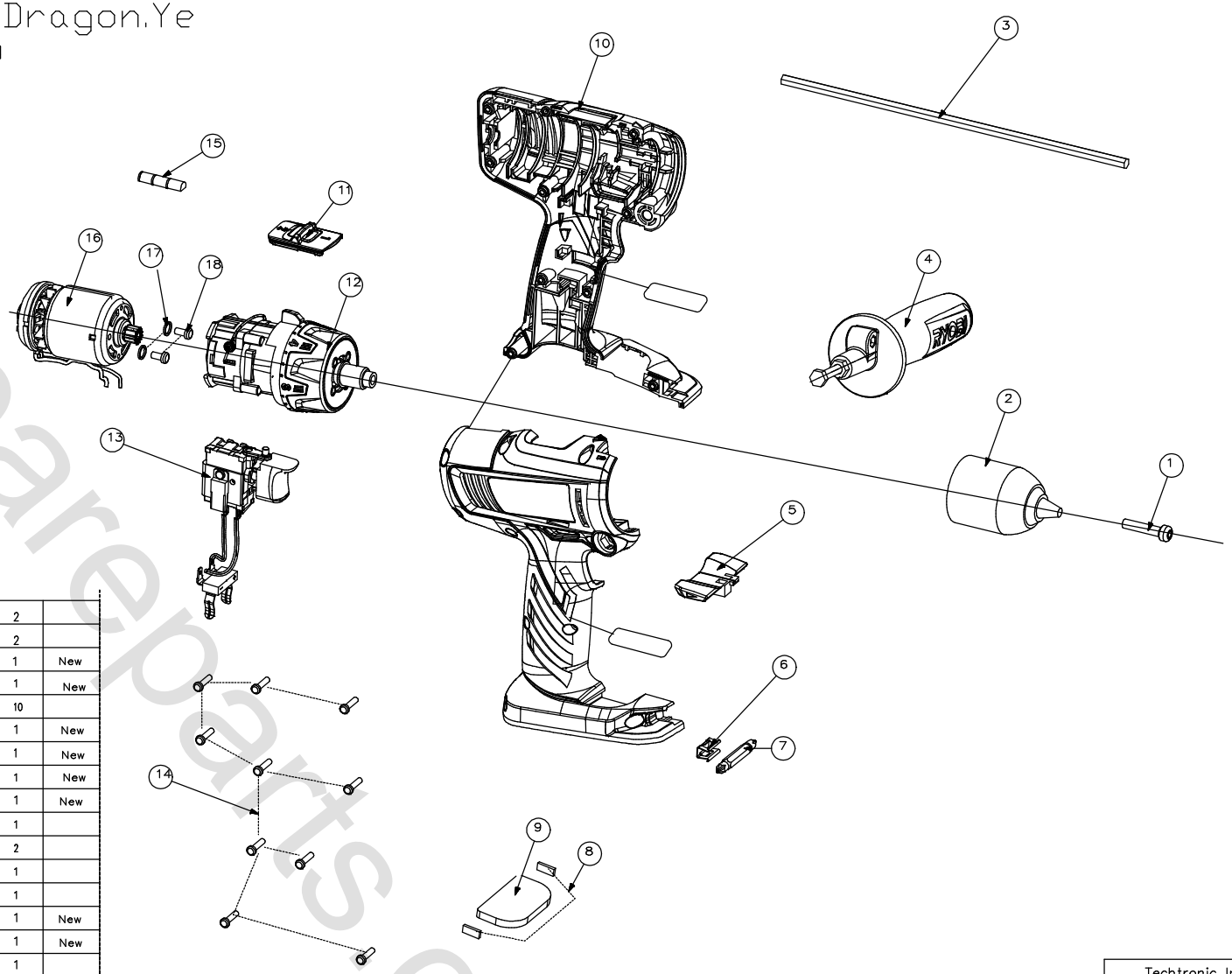

ITEM	P/N	DESCRIPTION	QTY	REMARK
18	660212005 01	M.SCREW,STEEL CH M4 PH\ L=8mmNi-PLATED	2	
17	670030004 01	SPRING WASHER,STEEL OD7.2XID4.1X1mm	2	
16	230298001 01	MOTOR ASS'Y	1	New
15	303433002 01	TOP LEVERLLER ASS'Y \010591	1	New
14	660031012 01	M3.5x14mm \ NITRATE FINISH SILVER T10	10	
13	270001487 01	switch assy	1	New
12	303724002 01	Clutch cap & Gear box assy\010591002	1	New
11	350414002 01	W/SS FOR 520414002,2-SPEED CHANGE KNOB W/OVERMOULD	1	New
10	303725002 01	Housing assy w/labels 010591002	1	New
9	300823003 01	W/SS FOR P/N 600823001, MAGNET 56x30x5mm	1	
8	560444002 01	PLASTIC,FOAM RUBBER 23x4x2mm	2	
7	670820045 01	DOUBLE BIT,HC STEEL FH PH SLOT H2 S6 L50mm	1	
6	630206001 01	STAMPING,SUS304-CSP BITCLIP 0.4mm THK	1	
5	350413002 01	W/SS FOR 520413002,F/R PUSH BUTTON	1	New
4	303570001 01	AUX.HANDLE ASS'Y	1	New
3	630412010 01	STAMPING,HEXAGON GUIDE ROD GAUGEW	1	
2	670764001 01	CHUCK,W/LOCK W/O CARBIRDE KEYLESS	1	New
1	660134002 01	M SCREW,SCM435 M6X1.0X27mm \Ni-PLATED	1	

Techtronic Industries Co. Ltd.

TITLE 2-SPEED COMPACT HAMMER DRILL		MODEL NO. 010591002	
	DWN BY Dragon	DO NOT SCALE DRAWING	SCALE 1:1
	CHK BY Seven	ALL DIMENSIONS IN mm	SHEET OF
	APP BY Body	CAD FILE DWG NO.	A0

toolsspareparts.com