M 18 BMT

A&M Tool p/n	A&M Console p/n	TTi p/n	Typ	Explo-Drawing	Change	Date	Editor
4933 4462 10 4933 4462 03	4000 4462 04		<EU> <***>	4926446208	A1399	22/10/2013	Harken

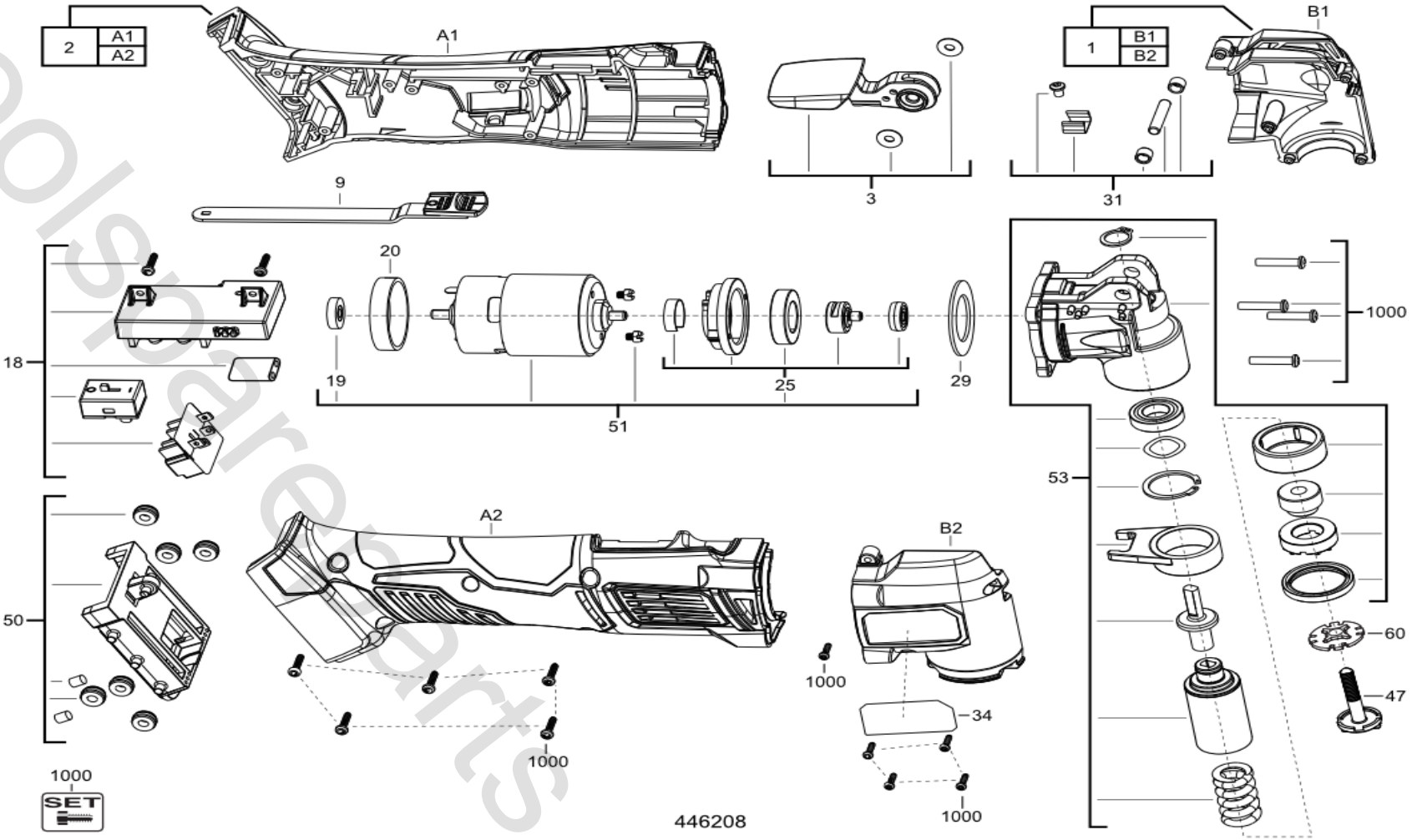

toolspareparts.com