DRAWING NUMBER	SIZE
090907003	4

TOLERANCE FOR PLASTIC	
DIVSION DIMENSION	TOLERANCE ICLASS 51
-10	±0.10
10-30	±0.15
30-50	±0.20
50-75	±0.25
75-100	±0.30
100-125	±0.35
125-150	±0.40
150-175	±0.45
175-200	±0.50
200-250	±0.60
250-315	±0.70

REVISION				
REV	ZONE	DESCRIPTION	ECR	CHECKED
01		DESIGN RELEASE	XXXXXXXX	XXX XX/XX/XX
COMPUTERIZED DOCUMENT NO MANUAL REVISIONS PRRMITTED				

PRELIMINARY

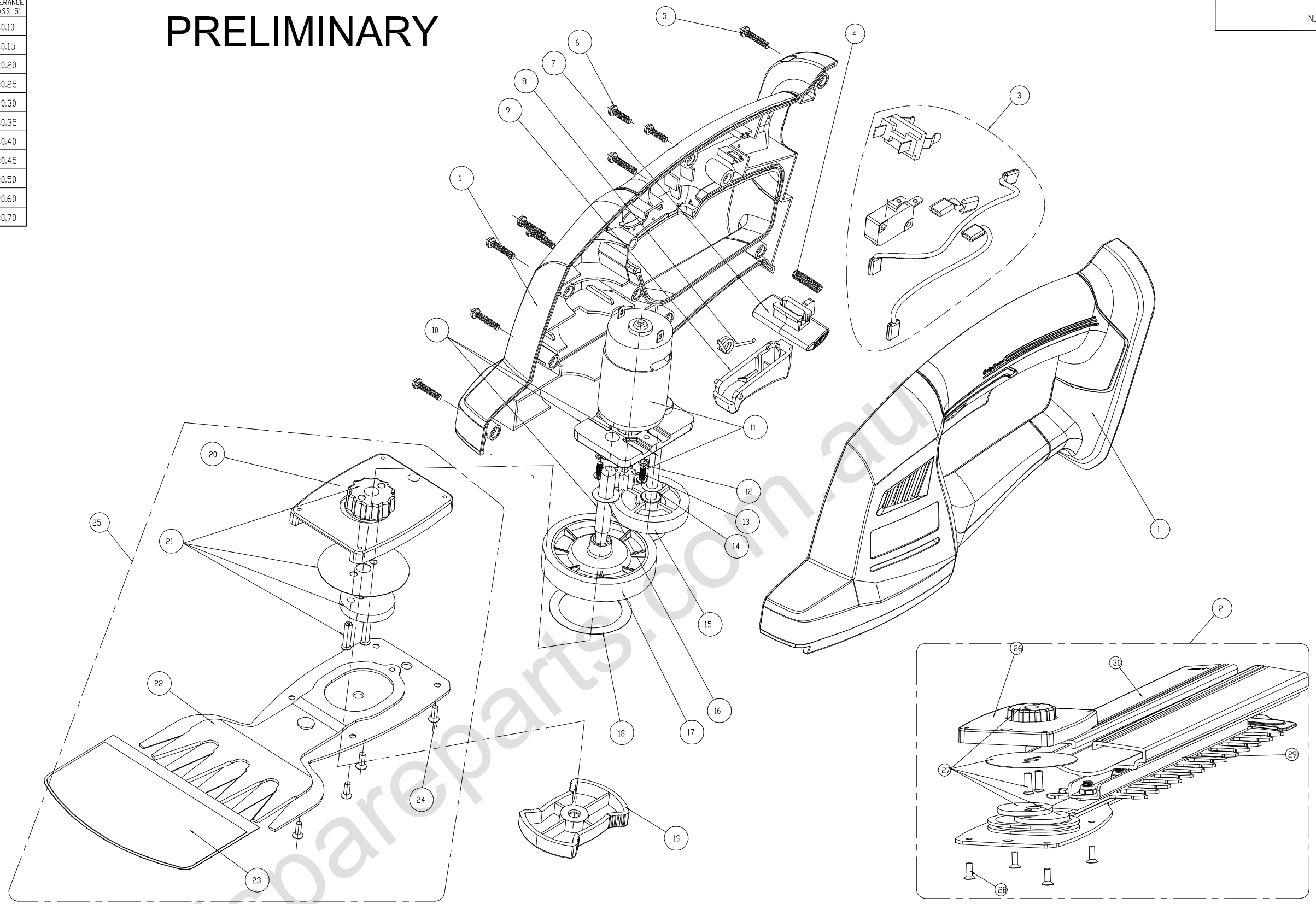

NOTES:

1. SEE QUALITY ASSURANCE FOR ADDRESSING CRITICAL AND MAJOR INSPECTIONS.

TOTAL Ⓒ DIMENSIONS THIS PAGE = 0

TOTAL Ⓜ DIMENSIONS THIS PAGE = 0

PRELIMINARY

PART NUMBER	DESCRIPTION	REMARK
090907003	18VDC GRASS SHEAR/HEDGE TRIMMER	

M.S.
P.S.
DIST ---- PURCH/FAB P

THIS DRAWING BELONGS TO TTI GROUP NORTH AMERICA ITS CONTENTS ARE CONFIDENTIAL AND PROPRIETARY AND SHALL NOT BE DISCLOSED TO OR USED BY OR FOR OUTSIDE PARTIES WITHOUT TTI GROUP NORTH AMERICA'S WRITTEN CONSENT.

UNLESS OTHERWISE SPECIFIED DIMENSIONS ARE IN MILLIMETERS DIMENSIONS PLEASE REFER TO THE CAD SCALE, USE DIMENSIONS ONLY. DIMENSION & TOLERANCE PER ASME Y14.5M-1994

THIRD ANGLE PROJECTION

DWN BY My.Liang Aug 18,08 DATE
CHK BY JZ.Guo Aug 18,08 DATE
APP BY HK.Zhou Aug 18,08 DATE

MATERIAL SEE BOM

TTI GROUP NORTH AMERICA

TITLE 18VDC GRASS SHEAR/ HEDGE TRIMMER 1 OF 1

SIZE 4 | DRAWING NUMBER 090907003 | REV 01

SCALE NONE | SHEET 1 OF 1

toolspareparts.com