SIZE	DRAWING NUMBER
4	090905003

TOLERANCE FOR PLASTIC

DIVSION DIMENSION	TOLERANCE ICLASS 51
-10	±0.10
10-30	±0.15
30-50	±0.20
50-75	±0.25
75-100	±0.30
100-125	±0.35
125-150	±0.40
150-175	±0.45
175-200	±0.50
200-250	±0.60
250-315	±0.70

REVISION

REV	ZONE	DESCRIPTION	ECR	CHECKED
01		DESIGN RELEASE	XXXXXXXX	XXX XX/XX/XX

COMPUTERIZED DOCUMENT
NO MANUAL REVISIONS PRRMITTED

PRELIMINARY

CHARGER (18V)

POWER PACK (18V)

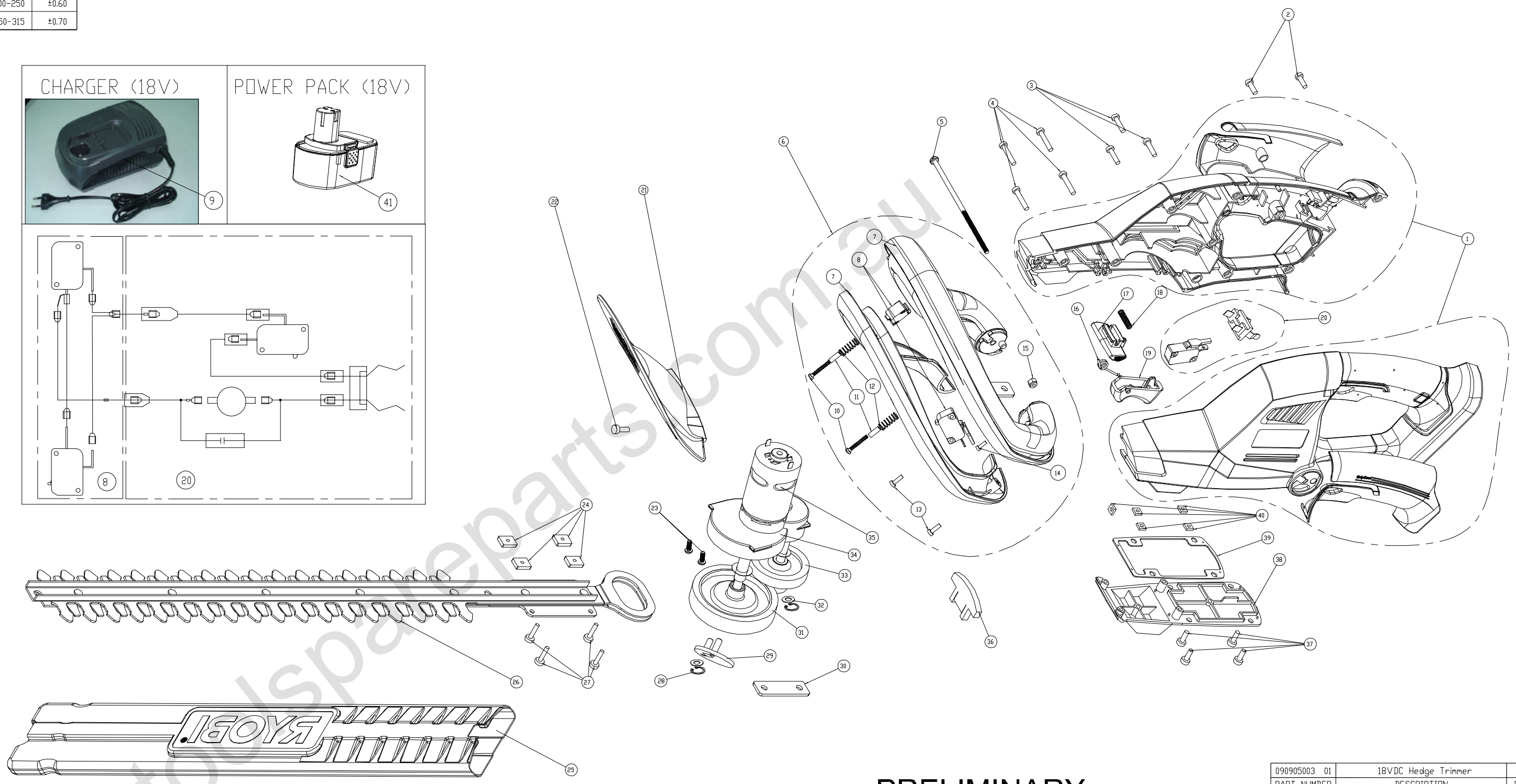

PRELIMINARY

PART NUMBER	DESCRIPTION	REMARK
090905003 01	18VDC Hedge Trimmer	

M.S.
P.S.
DIST --- PURCH/FAB P

"THIS DRAWING BELONGS TO TTI GROUP NORTH AMERICA ITS CONTENTS ARE CONFIDENTIAL AND PROPRIETARY AND SHALL NOT BE DISCLOSED TO OR USED BY OR FOR OUTSIDE PARTIES WITHOUT TTI GROUP NORTH AMERICA'SWRITTEN CONSENT."

UNLESS OTHERWISE SPECIFIED DIMENSIONS ARE IN MILLIMETERS DIMENSIONS PLEASE REFER TO THE CAD SCALE, USE DIMENSIONS ONLY. DIMENSION & TOLERANCE PER ASME Y14.5M-1994

THIRD ANGLE PROJECTION

		DATE
DWN BY	LMY Aug 28,08	
CHK BY	GJZ Aug 28,08	
APP BY	ZHJ Aug 28,08	

MATERIAL: SEE BOM

TTI GROUP NORTH AMERICA

TITLE: 18VDC Hedge Trimmer 1 OF 1

SIZE 1 | DRAWING NUMBER 090905003 | REV 01

SCALE NONE | SHEET 1 OF 1

NOTES:

1. SEE QUALITY ASSURANCE FOR ADDRESSING CRITICAL AND MAJOR INSPECTIONS.

TOTAL (C) DIMENSIONS THIS PAGE = 0

TOTAL (M) DIMENSIONS THIS PAGE = 0

toolspareparts.com.au