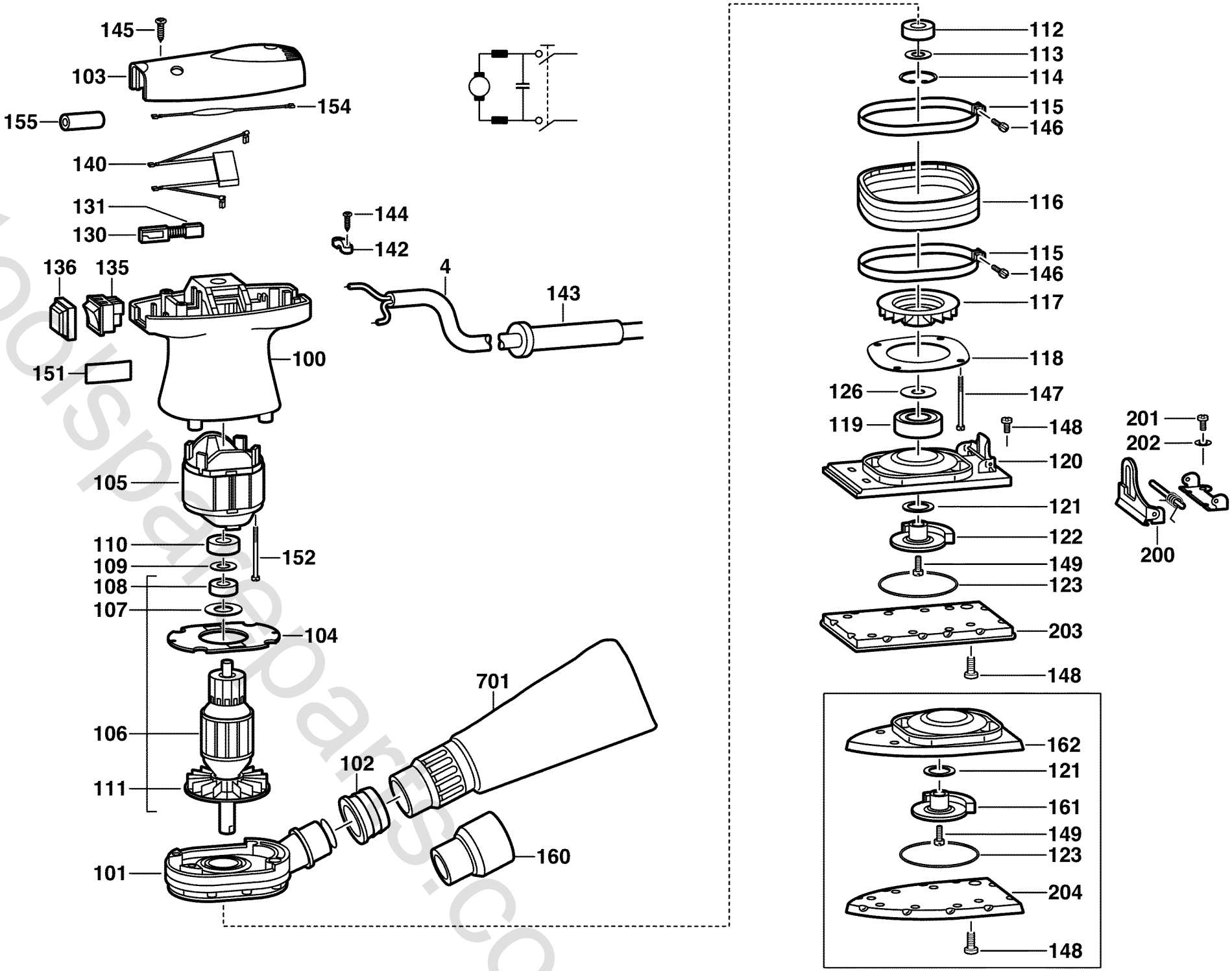

toolspareparts.com