SIZE	DRAWING NUMBER
	XXXX-XXXXX

REVISIONS

REV	ZONE	DESCRIPTION	ECR	CHECKED
01		RELEASE		

COMPUTERIZED DOCUMENT
NO MANUAL REVISIONS PERMITTED

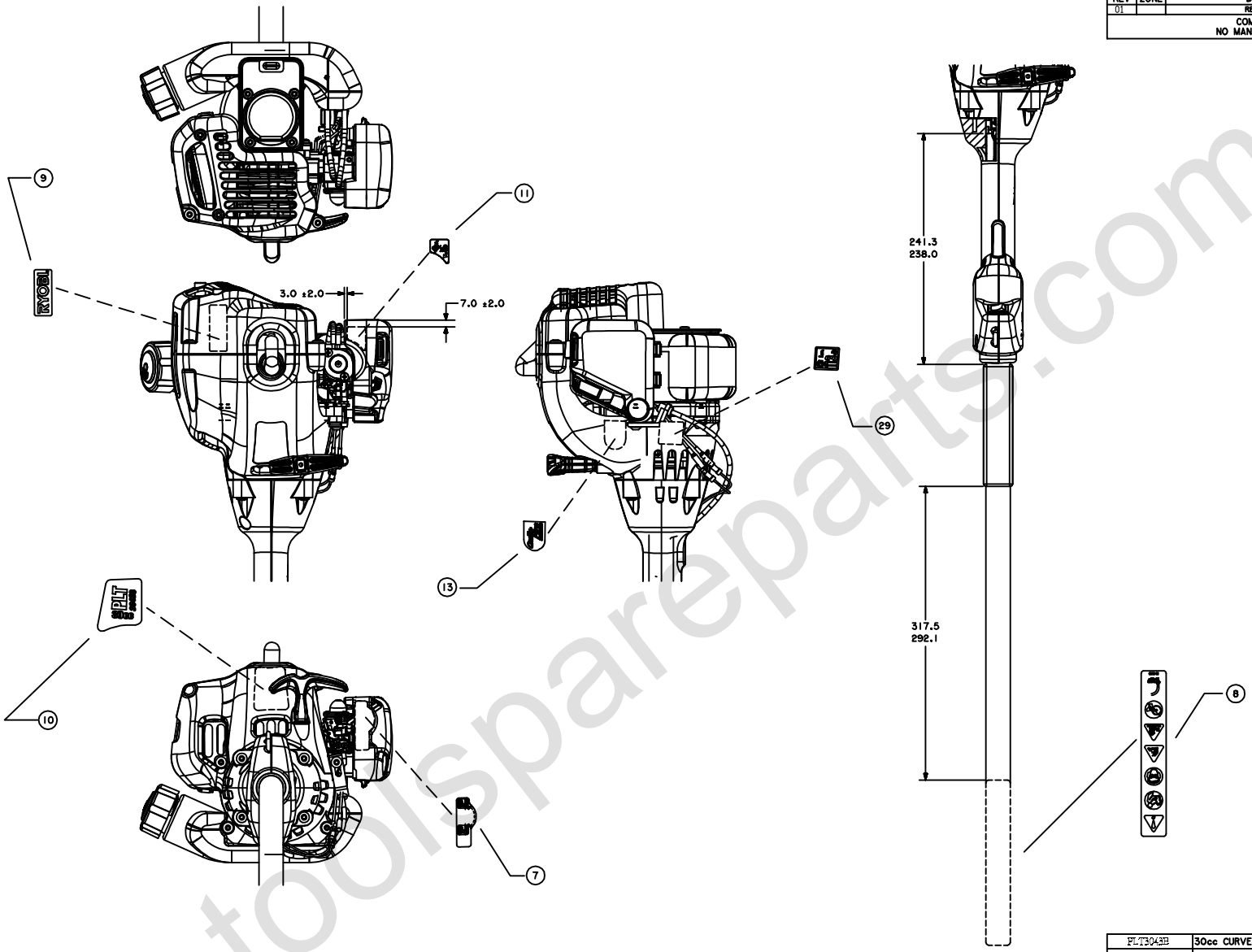

PART NUMBER	DESCRIPTION	REMARKS
PLT3043B	30cc CURVED SHAFT TRIMMER	AS ASSEMBLIED

SIZE	DRAWING NUMBER	PLT3043B	REV 01
SCALE	GROUP CODE	SHEET 2 OF 2	

FOR FULL TOLERANCE AND MATERIAL SPECIFICATIONS, REFER TO SHEET 1

toolsparereparts.com.au