SIZE	DRAWING NUMBER
3	090904005

TOLERANCE FOR PLASTIC

DIVISION DIMENSION	TOLERANCE (CLASS 5)
-10	±0.10
10-30	±0.15
30-50	±0.20
50-75	±0.25
75-100	±0.30
100-125	±0.35
125-150	±0.40
150-175	±0.45
175-200	±0.50
200-250	±0.60
250-315	±0.70

REVISIONS

REV	ZONE	DESCRIPTION	ECR	CHECKED
01		DESIGN RELEASE LH/XDJ 01/06/12	0P1112068	XDJ 01/31/12

COMPUTERIZED DOCUMENT
NO MANUAL REVISIONS PERMITTED

OP
Uncontrolled copy for reference only (D.C.C)

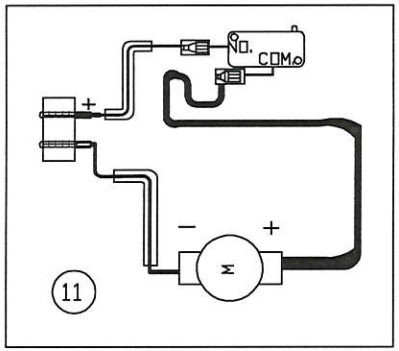

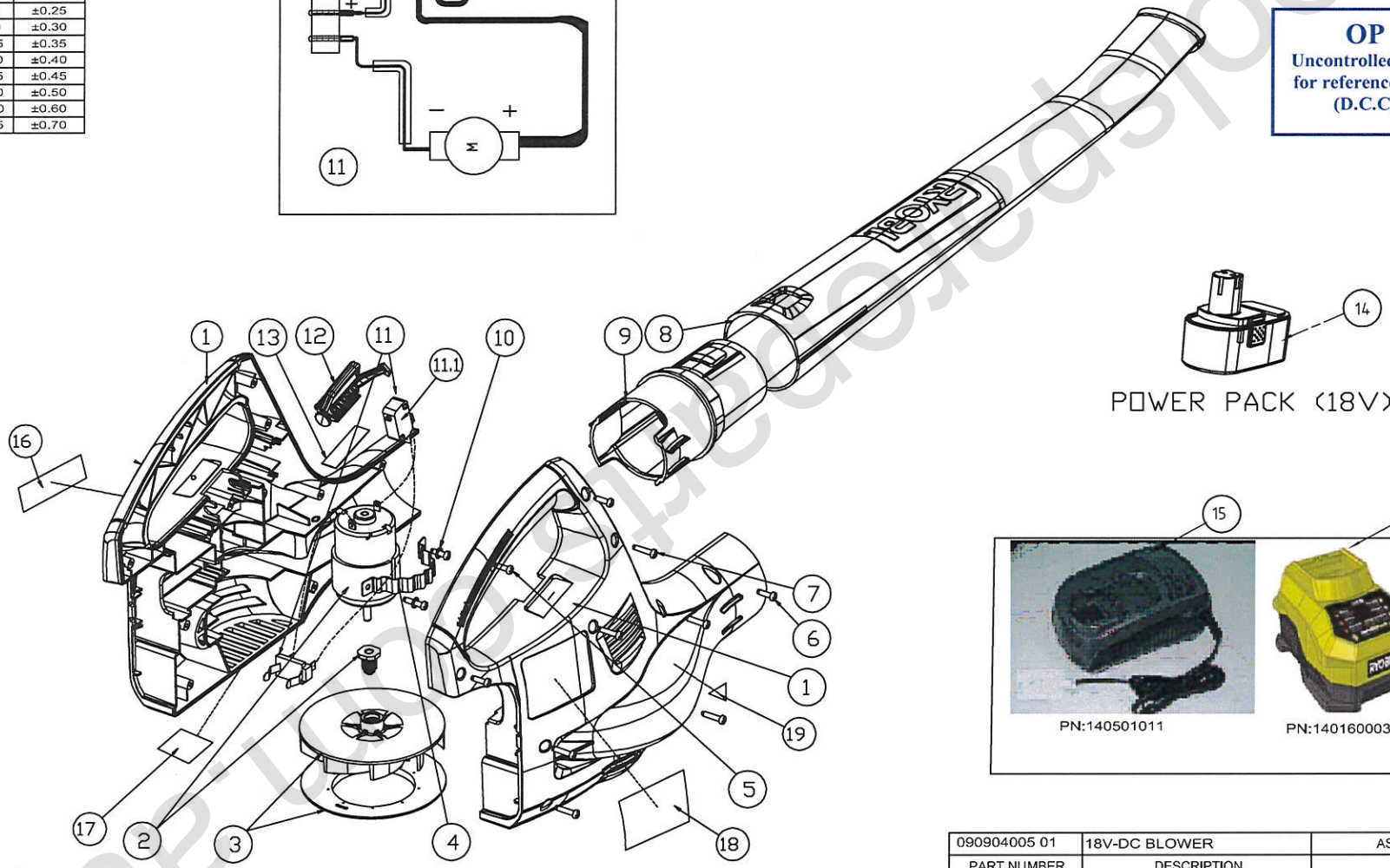

POWER PACK (18V)

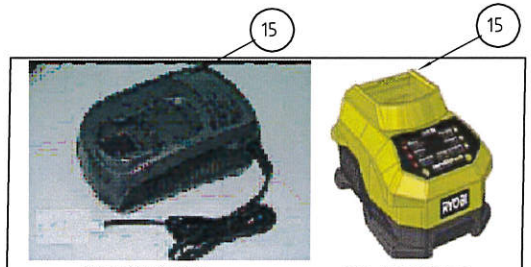

PART NUMBER	DESCRIPTION	REMARKS
090904005 01	18V-DC BLOWER	AS PURCHASED

NOTES:

1. SEE QUALITY ASSURANCE FOR ADDRESSING CRITICAL AND MAJOR INSPECTIONS.

TOTAL (C) DIMENSIONS THIS PAGE = 0

TOTAL (M) DIMENSIONS THIS PAGE = 0

M.S.
P.S.
DIST ___ PURCH/FAB P

"THIS DRAWING BELONGS TO TTI GROUP NORTH AMERICA. ITS CONTENTS ARE CONFIDENTIAL AND PROPRIETARY AND SHALL NOT BE DISCLOSED TO OR USED BY OR FOR OUTSIDE PARTIES WITHOUT TTI GROUP NORTH AMERICA'S WRITTEN CONSENT."

UNLESS OTHERWISE SPECIFIED DIMENSIONS ARE IN MILLIMETERS. FOR ALL UNSPECIFIED DIMENSIONS PLEASE REFER TO THE CAD FILE. DO NOT SCALE, USE DIMENSIONS ONLY. DIMENSION & TOLERANCE PER ASME Y14.5M-1994

THIRD ANGLE PROJECTION

		DATE
DRAWN BY	XDJ	06/01/12
CHECKED BY	GJZ	06/01/12
APPROVED BY	ZHJ	06/01/12

MATERIAL: SEE BOM

TTI GROUP NORTH AMERICA

TITLE: 18V-DC BLOWER

SIZE 3 | DRAWING NUMBER 090904005 | REV 01

SCALE 1:1 | SHEET 1 OF 1

netpartsforcordless.com