TOLERANCE FOR PLASTIC	
DIVISION DIMENSION	TOLERANCE (CLASS 5)
-10	±0.10
10-30	±0.15
30-50	±0.20
50-75	±0.25
75-100	±0.30
100-125	±0.35
125-150	±0.40
150-175	±0.45
175-200	±0.50
200-250	±0.60
250-315	±0.70

REVISIONS				
REV	ZONE	DESCRIPTION	FCR	CHECKED
01		DESIGN RELEASE	HL2008022	ZHJ 08/19/09

COMPUTERIZED DOCUMENT
NO MANUAL REVISIONS PERMITTED

Homelite
Uncontrolled copy for reference copy (D.C.C)

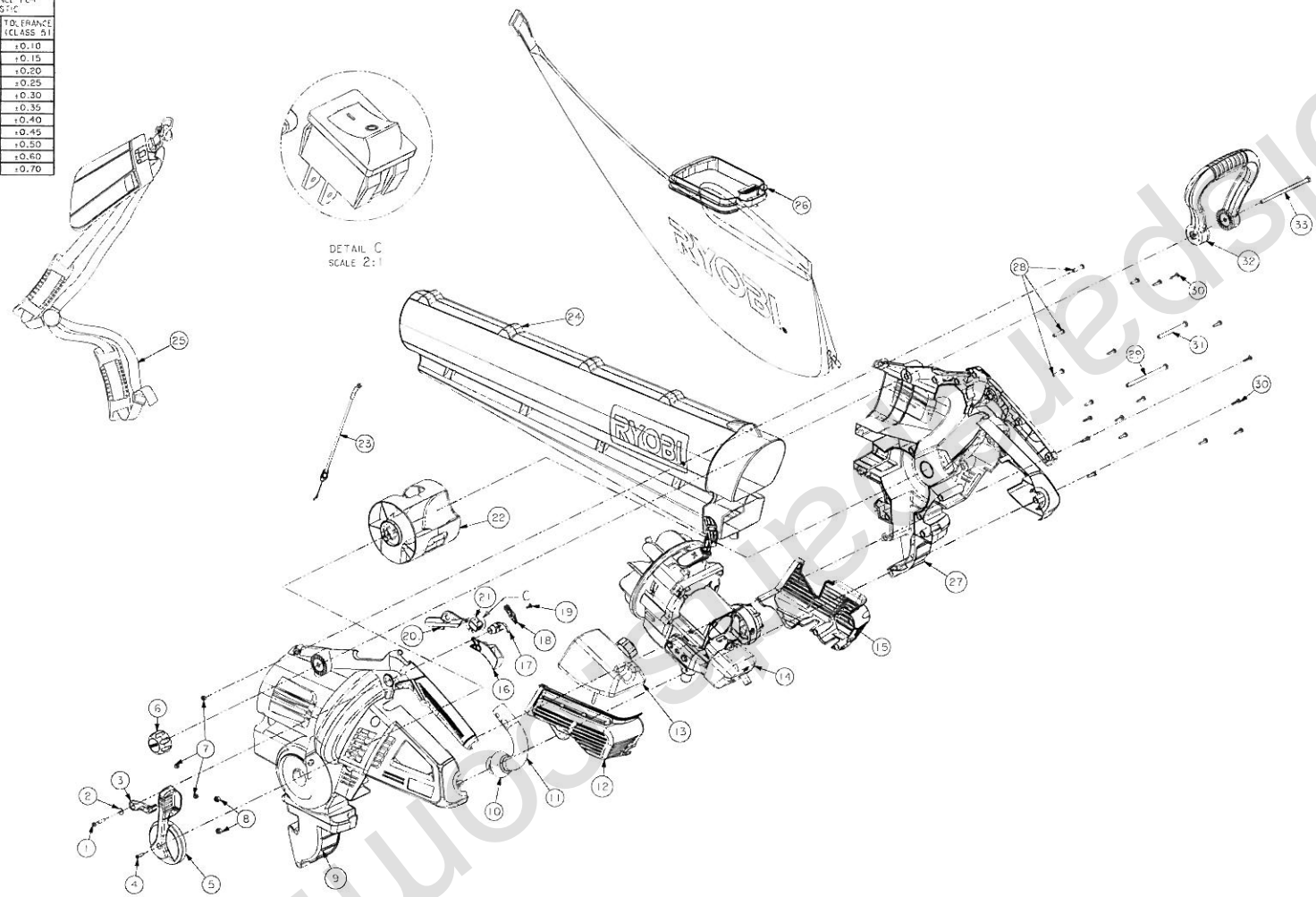

NOTES:

1. SEE QUALITY ASSURANCE FOR ADDRESSING CRITICAL AND MAJOR DIMENSIONS

TOTAL (C) THIS PAGE = 0

TOTAL (M) THIS PAGE = 0

PART NUMBER	DESCRIPTION	REMARKS
090460011	30cc MULCHING BLOWER VACUUM RYOBI RBL 30MVA	AS PURCHASED

M.S
P.S
DIST PURCHASER P

THIS DRAWING BELONGS TO TTI GROUP NORTH AMERICA. ITS CONTENTS ARE CONFIDENTIAL AND PROPRIETARY AND SHALL NOT BE DISCLOSED TO OR USED BY OR FOR OUTSIDE PARTIES WITHOUT TTI GROUP NORTH AMERICA'S WRITTEN CONSENT.

UNLESS OTHERWISE SPECIFIED DIMENSIONS ARE IN MILLIMETERS. FOR ALL UNSPECIFIED DIMENSIONS PLEASE REFER TO THE CAD FILE. DO NOT SCALE. USE DIMENSIONS ONLY. DIMENSION & TOLERANCE PER ASME Y14.5M-1994

THIRD ANGLE PROJECTION

DRAWN BY SX DATE 08/06/09
CHECKED BY ZHJ DATE 08/06/09
APPROVED BY WZJ DATE 08/06/09
MATERIAL N/A

TTI GROUP NORTH AMERICA

TITLE 30cc MULCHING BLOWER VACUUM RYOBI RBL 30MVA

SIZE A4 DRAWING NUMBER 090460011 REV 01
SCALE 1:4 SHEET 1 OF 1

toolspareparts.com.au