SIZE	DRAWING NUMBER
A	309740005

TOLERANCE FOR METAL

DIVISION DIMENSION	TOLERANCE ± IT 12 ±
-10	±0.08
10-30	±0.11
30-50	±0.13
50-80	±0.15
80-120	±0.18
120-180	±0.20
180-250	±0.23
250-315	±0.26
315-400	±0.29
400-500	±0.32
500-630	±0.35
630-800	±0.40
800-1000	±0.45

REVISIONS

REV	ZONE	DESCRIPTION	ECR	CHECKED
C1		DESIGN RELEASE	HL0908022	ZIU 08/19/09

COMPUTERIZED DOCUMENT
NO MANUAL REVISIONS PERMITTED

Homelite
Uncontrolled copy
for reference copy
(D.C.C.)

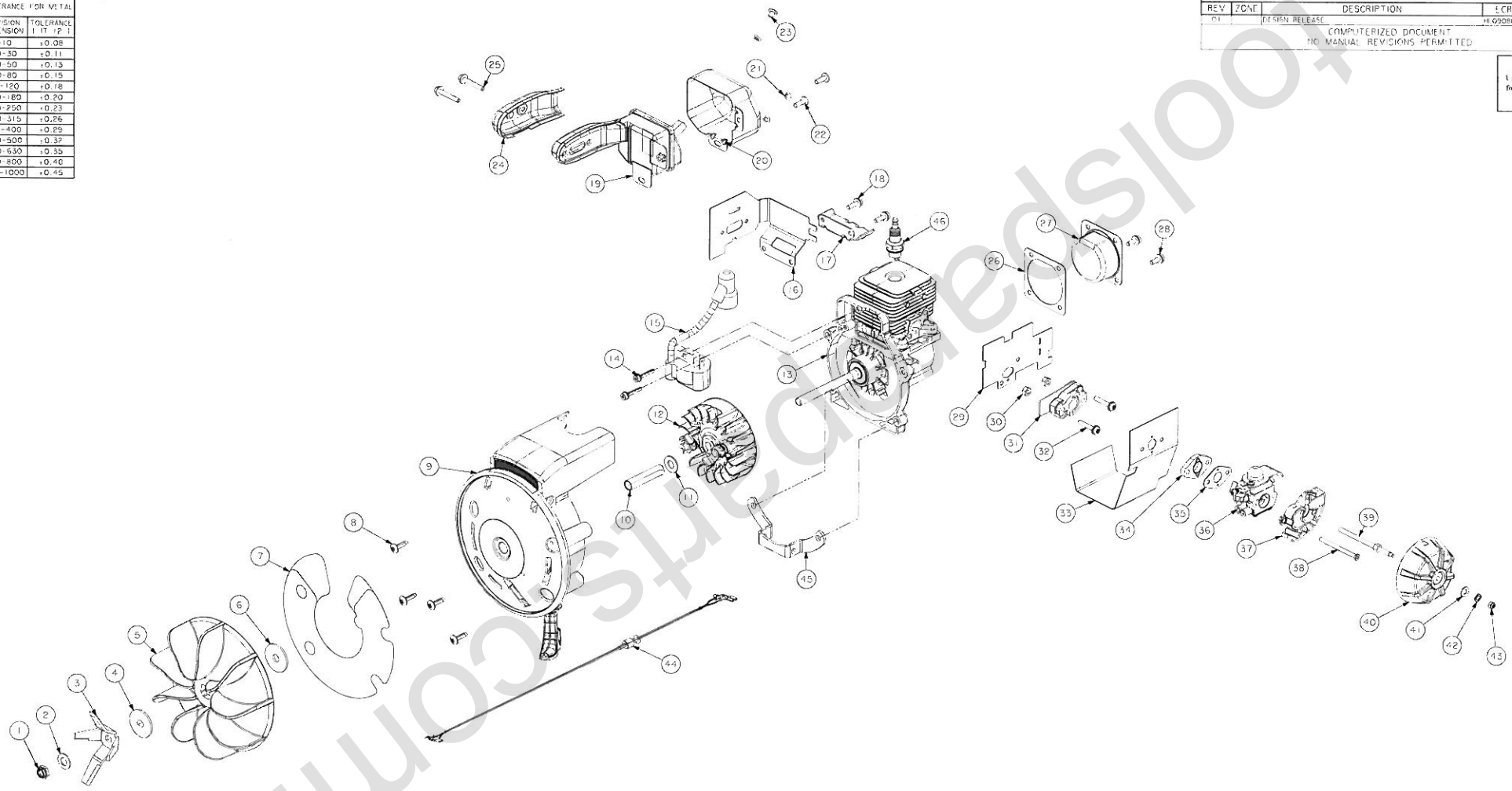

NOTES:

(M) 1. AIR GAP SETTING OF .203/.304 IS TO BE MADE WITH SHIM BETWEEN FLYWHEEL MAGNETS AND IGNITION PICKUPS 2 PLACES SIMULTANEOUSLY. THE IGNITION MODULE, ITEM 15, AND FLYWHEEL, ITEM 12, MUST NOT TOUCH EACH OTHER FOR 360° OF FLYWHEEL ROTATION.

2. SEE QUALITY ASSURANCE FOR ADDRESSING CRITICAL AND MAJOR DIMENSIONS

TOTAL (C) THIS PAGE = 0

TOTAL (M) THIS PAGE = 1

PART NUMBER	DESCRIPTION	REMARKS
309740005	300C MULCHING BLOWER VACUUM ENGINE ASS'Y	AS PURCHASED

M.S.
P.S.
SHT - - - - PURCH/FAB P

THIS DRAWING BELONGS TO TTI GROUP NORTH AMERICA. ITS CONTENTS ARE CONFIDENTIAL AND PROPRIETARY AND SHALL NOT BE DISCLOSED TO OR USED BY OR FOR OUTSIDE PARTIES WITHOUT TTI GROUP NORTH AMERICA'S WRITTEN CONSENT.

UNLESS OTHERWISE SPECIFIED DIMENSIONS ARE IN MILLIMETERS. FOR ALL UNSPECIFIED DIMENSIONS PLEASE REFER TO THE CAD FILE. DO NOT SCALE. USE DIMENSIONS ONLY. DIMENSION & TOLERANCE PER ASME Y14.5M-1994

THIRD ANGLE PROJECTION

DRAWN BY I. SX.	DATE 08/03/09	TTI GROUP NORTH AMERICA
CHECKED BY ZIU	DATE 08/03/09	TITLE 300C MULCHING BLOWER VACUUM ENGINE ASS'Y
APPROVED BY KW.MA	DATE 08/03/09	
MATERIAL N/A	SIZE A	DRAWING NUMBER 309740005 — REV C1
	SCALE N/A	SHEET 1 OF 1

toolspedpartsgroup.com.au