090990060	
TOLERANCE FOR METAL	
DIVISION DIMENSION	TOLERANCE (IT 12)
1-10	±0.08
10-30	±0.11
30-50	±0.13
50-80	±0.15
80-120	±0.18
120-180	±0.20
180-250	±0.23
250-315	±0.26
315-400	±0.29
400-500	±0.32
500-630	±0.35
630-800	±0.40
800-1000	±0.45

REVISIONS				
REV	ZONE	DESCRIPTION	ECR	CHECKED
01		DESIGN RELEASED DXL/XLY 03/02/09	14.0903003	XLY 03/27/09

COMPUTERIZED DOCUMENT
NO MANUAL REVISIONS PERMITTED

Homelite
Uncontrolled copy for reference only (D.C.C)

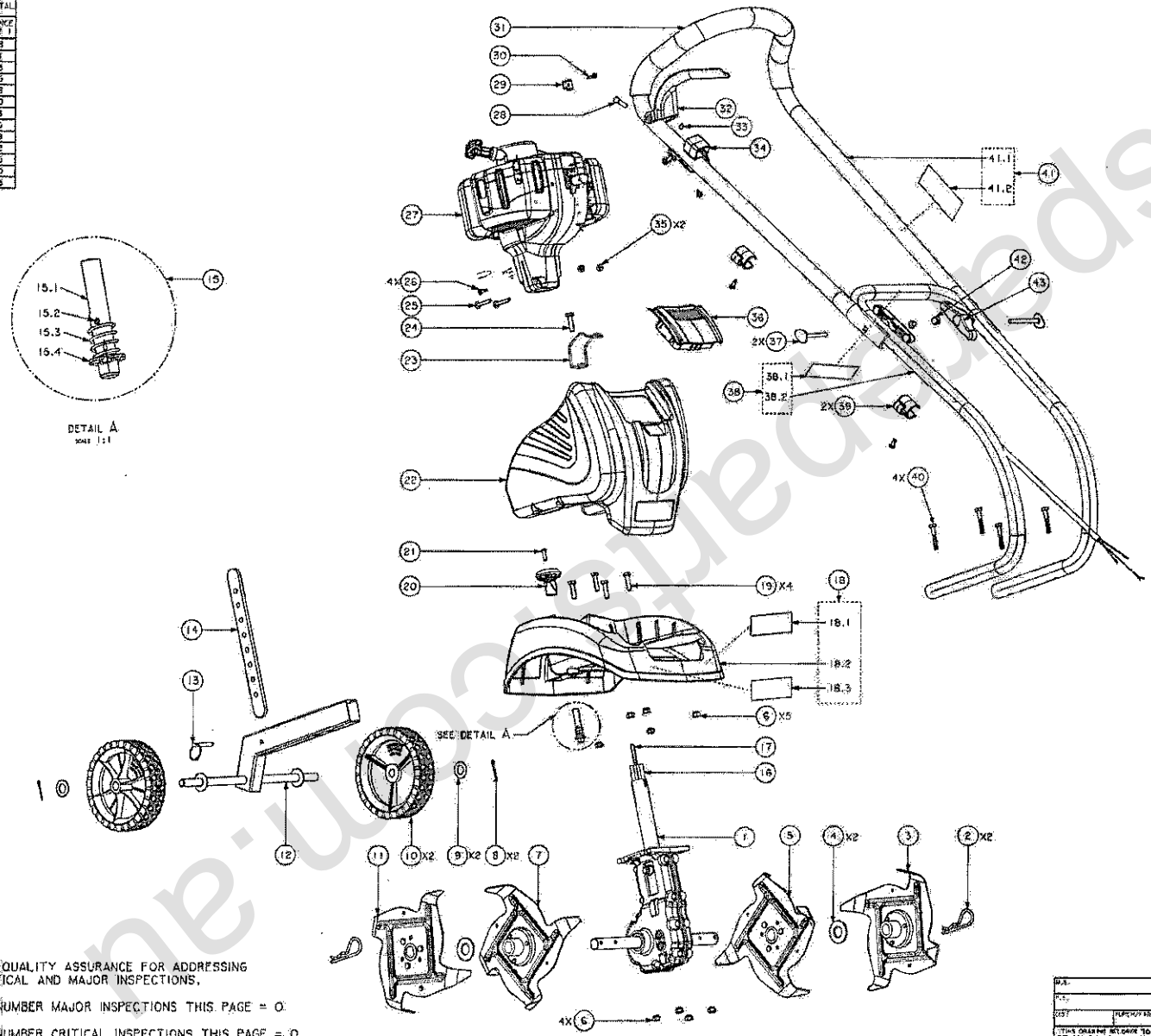

NOTES:

1. SEE QUALITY ASSURANCE FOR ADDRESSING CRITICAL AND MAJOR INSPECTIONS.

(M) NUMBER MAJOR INSPECTIONS THIS PAGE = 0

(C) NUMBER CRITICAL INSPECTIONS THIS PAGE = 0

090066003	RYOBI 25.4cc PETROL CULTIVATOR	AS PURCHASED
PART NUMBER	DESCRIPTION	REMARKS

M.A. / K.S. / DST / REPORT NO.	UNLESS OTHERWISE SPECIFIED DIMENSIONS ARE IN MILLIMETERS. FOR ALL UNSPECIFIED DIMENSIONS PLEASE REFER TO THE CAD FILE. DO NOT SCALE. USE DIMENSIONS ONLY. DIMENSION & TOLERANCE PER ASME Y14.5M-1994	DRAWN BY DXL 03/02/09 · CHECKED BY XLY 03/02/09 · APPROVED BY KW.NA 03/02/09 · MATERIAL N/A · THIRD ANGLE PROJECTION
		TTI GROUP NORTH AMERICA · TITLE: RYOBI 25.4cc PETROL CULTIVATOR · SIZE 4 · DRAWING NUMBER 090066003 · REV 01 · SCALE NONE · SHEET 1 OF 1

THIS DRAWING RELEASED TO TTI GROUP NORTH AMERICA, ITS CONTENTS ARE CONFIDENTIAL AND PROPRIETARY AND SHALL NOT BE DISCLOSED TO OR USED BY OR FOR OUTSIDE PARTIES WITHOUT TTI GROUP NORTH AMERICA'S WRITTEN CONSENT.

ne·woodspeedparts.com