DRAWING NUMBER	SIZE
099979061	4

TOLERANCE FOR PLASTIC	
DIVISION DIMENSION	TOLERANCE (CLASS 5)
-10	±0.10
10-30	±0.15
30-50	±0.20
50-75	±0.25
75-100	±0.30
100-125	±0.35
125 150	±0.40
150-175	±0.45
175-200	±0.50
200-250	±0.60
250-315	±0.70

REVISIONS

REV	ZONE	DESCRIPTION	ECR	CHECKED
01		DESIGN RELEASE CRAB 10/31/12	CP1306001	GERARDO 06/06/13
02		ADD SHEET 2 ENGINE SPL CRAB 08/08/13	XXXX	XXXX

COMPUTERIZED DOCUMENT
NO MANUAL REVISION PERMITTED

PRELIMINARY

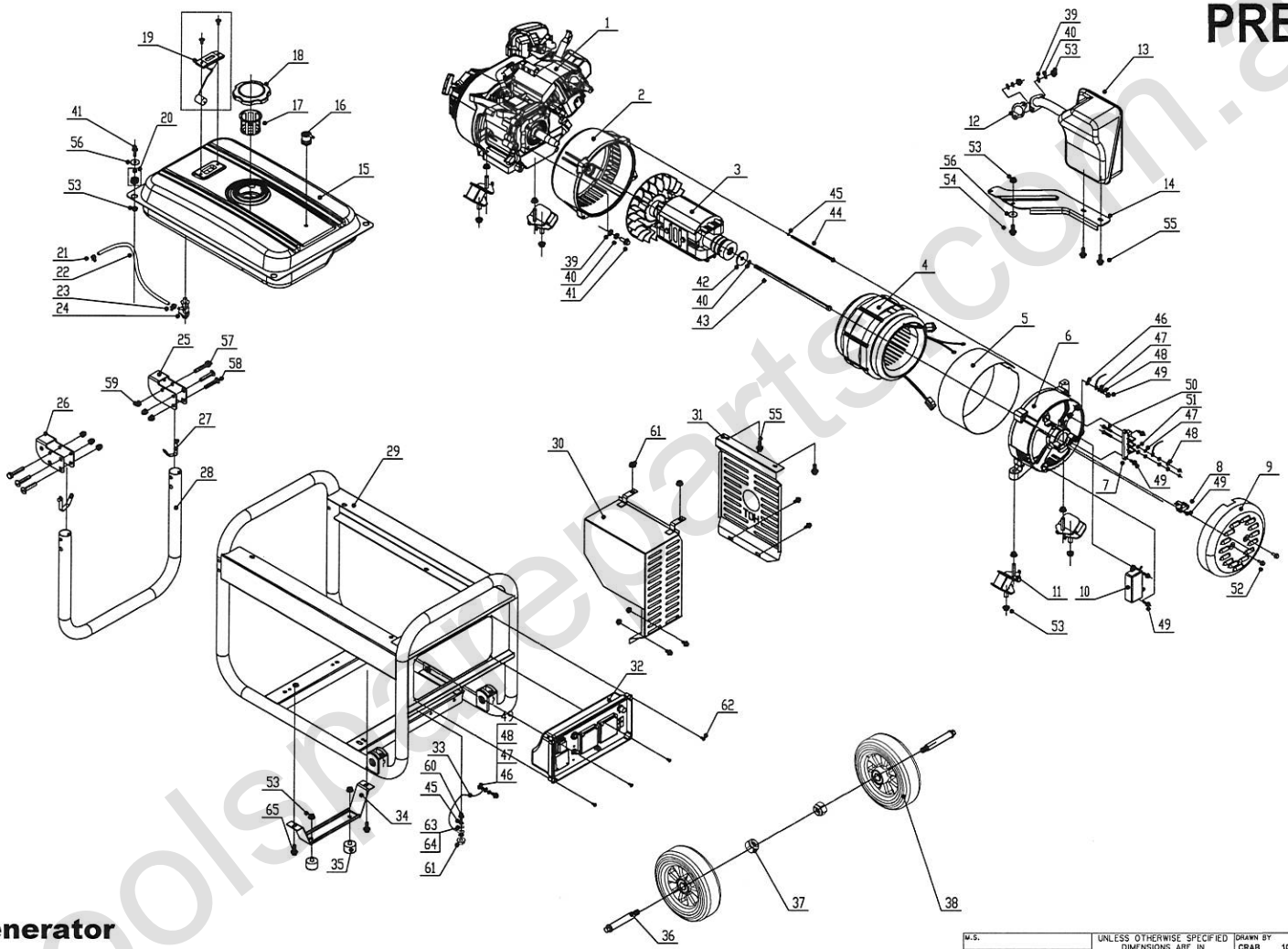

RYOBI Generator
RGN2400A

toolspareparts.com.au

M.S.	UNLESS OTHERWISE SPECIFIED DIMENSIONS ARE IN MILLIMETERS. FOR ALL UNSPECIFIED DIMENSIONS PLEASE REFER TO THE CAD FILE. DO NOT SCALE. USE DIMENSIONS ONLY. DIMENSION & TOLERANCE PER ASME Y14.5M-1994	DRAWN BY CRAB DATE 10/31/12	TTI GROUP NORTH AMERICA
P.S.		CHECKED BY GERARDO DATE 10/31/12	TITLE RGN2400A
DIST / PURCH/FAB		APPROVED BY GERARDO DATE 10/31/12	
"THIS DRAWING BELONGS TO TTI GROUP NORTH AMERICA. ITS CONTENTS ARE CONFIDENTIAL AND PROPRIETARY AND SHALL NOT BE DISCLOSED TO OR USED BY OR FOR OUTSIDE PARTIES WITHOUT TTI GROUP NORTH AMERICA'S WRITTEN CONSENT."	THIRD ANGLE PROJECTION	MATERIAL	SIZE 4 DRAWING NUMBER 099979061 REV 02
			SCALE SHEET 1 OF 2