DRAWING NUMBER	SIZE
099979066	4

TOLERANCE FOR PLASTIC	
DIVISION DIMENSION	TOLERANCE (CLASS 5)
-10	±0.10
10-30	±0.15
30-50	±0.20
50-75	±0.25
75-100	±0.30
100-125	±0.35
125-150	±0.40
150-175	±0.45
175-200	±0.50
200-250	±0.60
250-315	±0.70

REVISIONS

REV	ZONE	DESCRIPTION	ECR	CHECKED
01		DESIGN RELEASE CRAB 05/09/13	OP1306001	GERARDO 06/06/13
02		ADD SHEET 2 ENGINE SPL CRAB 08/08/13	XXXX	XXXX

COMPUTERIZED DOCUMENT
NO MANUAL REVISION PERMITTED

PRELIMINARY

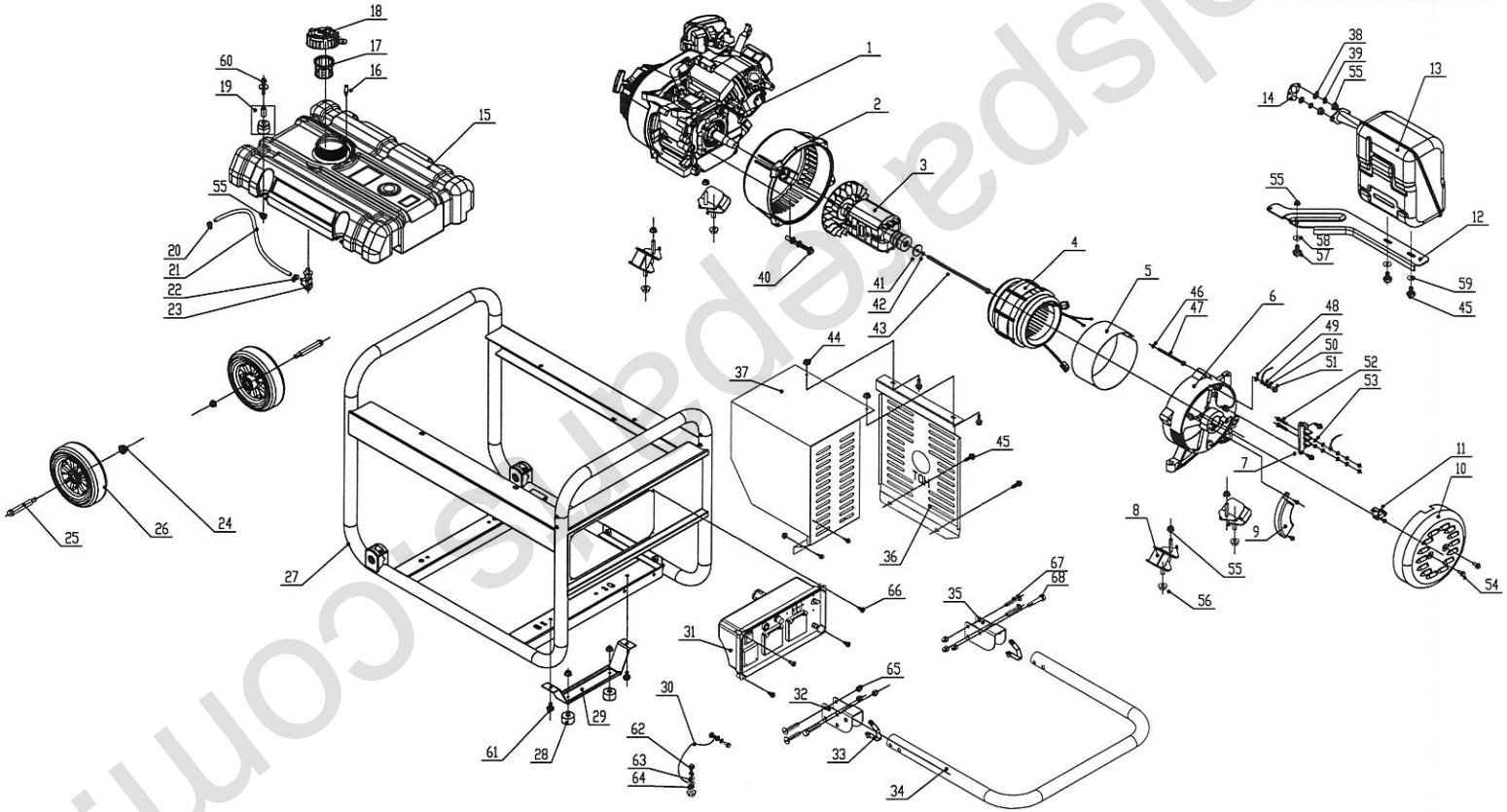

RYOBI Generator
RGN3800A

M.S.	UNLESS OTHERWISE SPECIFIED DIMENSIONS ARE IN MILLIMETERS. FOR ALL UNSPECIFIED DIMENSIONS PLEASE REFER TO THE CAD FILE. DO NOT SCALE. USE DIMENSIONS ONLY. DIMENSION & TOLERANCE PER ASME Y14.5M-1994 THIRD ANGLE PROJECTION	DRAWN BY CRAB DATE 05/09/12	TTI GROUP NORTH AMERICA
P.S.		CHECKED BY GERARDO DATE 05/09/12	TITLE RGN3800A
DIST / PURCH/FAB		APPROVED BY GERARDO DATE 05/09/12	
"THIS DRAWING BELONGS TO TTI GROUP NORTH AMERICA. ITS CONTENTS ARE CONFIDENTIAL AND PROPRIETARY AND SHALL NOT BE DISCLOSED TO OR USED BY OR FOR OUTSIDE PARTIES WITHOUT TTI GROUP NORTH AMERICA'S WRITTEN CONSENT."		MATERIAL	SIZE 4 / DRAWING NUMBER 099979066 / 02 REV
			SCALE / SHEET 1 OF 2

tool spareparts.com.au