DRAWING NUMBER	SIZE
090907007	4

TOLERANCE FOR PLASTIC	
DIVISION DIMENSION	TOLERANCE (CLASS S1)
-10	±0.10
10-30	±0.15
30-50	±0.20
50-75	±0.25
75-100	±0.30
100-125	±0.35
125-150	±0.40
150-175	±0.45
175-200	±0.50
200-250	±0.60
250-315	±0.70

REVISION				
REV	ZONE	DESCRIPTION	ECR	CHECKED
01		DESIGN RELEASE LH/XDJ 01/06/12	OP1112068	XDJ 01/31/12
COMPUTERIZED DOCUMENT NO MANUAL REVISIONS PERMITTED				

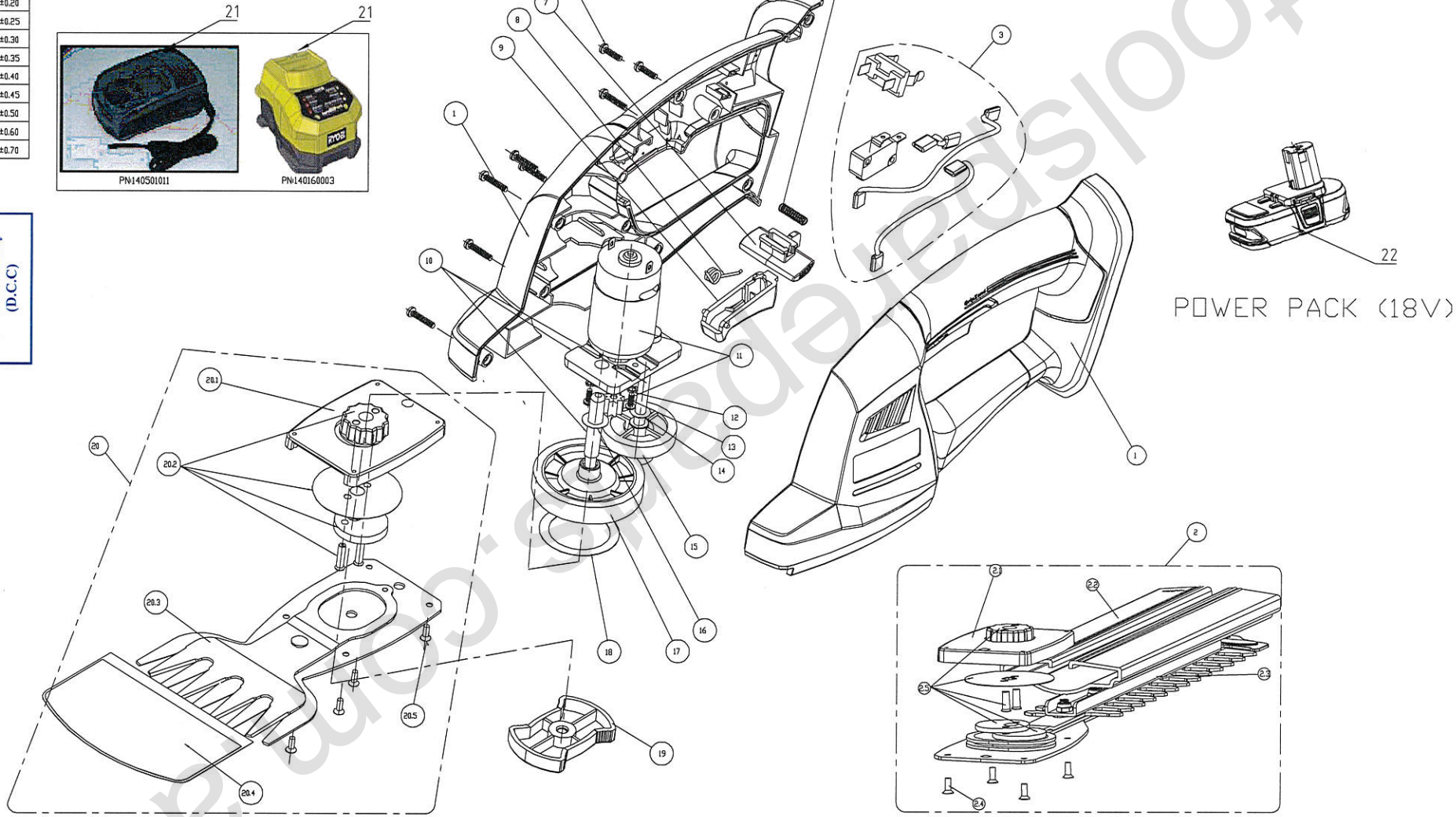

OP
Uncontrolled copy
for reference only
(D.C.C)

NOTES:

1. SEE QUALITY ASSURANCE FOR ADDRESSING CRITICAL AND MAJOR INSPECTIONS.

TOTAL (C) DIMENSIONS THIS PAGE = 0

TOTAL (M) DIMENSIONS THIS PAGE = 0

PART NUMBER	DESCRIPTION	REMARK
090907007	18VDC GRASS SHEAR/HEDGE TRIMMER	

DRAWN BY XDJ Jan06 2012	TTI GROUP NORTH AMERICA	
CHK BY G.P. Jan06 2012	TITLE 18VDC GRASS SHEAR/ HEDGE TRIMMER	
APP BY JHJ Jan06 2012		
MATERIAL SEE BOM	SIZE 4	DRAWING NUMBER 090907007 REV 01
	SCALE NONE	SHEET 1 OF 1

UNLESS OTHERWISE SPECIFIED DIMENSIONS ARE IN MILLIMETERS DIMENSIONS PLEASE REFER TO THE CAD SCALE. USE DIMENSIONS ONLY. DIMENSION & TOLERANCE PER ASME Y14.5M-1994

THIRD ANGLE PROJECTION

"THIS DRAWING BELONGS TO TTI GROUP NORTH AMERICA ITS CONTENTS ARE CONFIDENTIAL AND PROPRIETARY AND SHALL NOT BE DISCLOSED TO OR USED BY OR FOR OUTSIDE PARTIES WITHOUT TTI GROUP NORTH AMERICA'S WRITTEN CONSENT."

tool spare parts.com