600WATT 420MM GARDEN TRIMMER
MODEL RGT420D

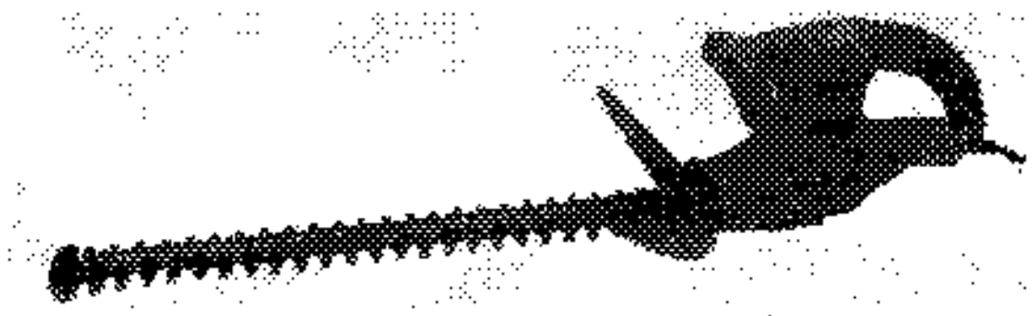

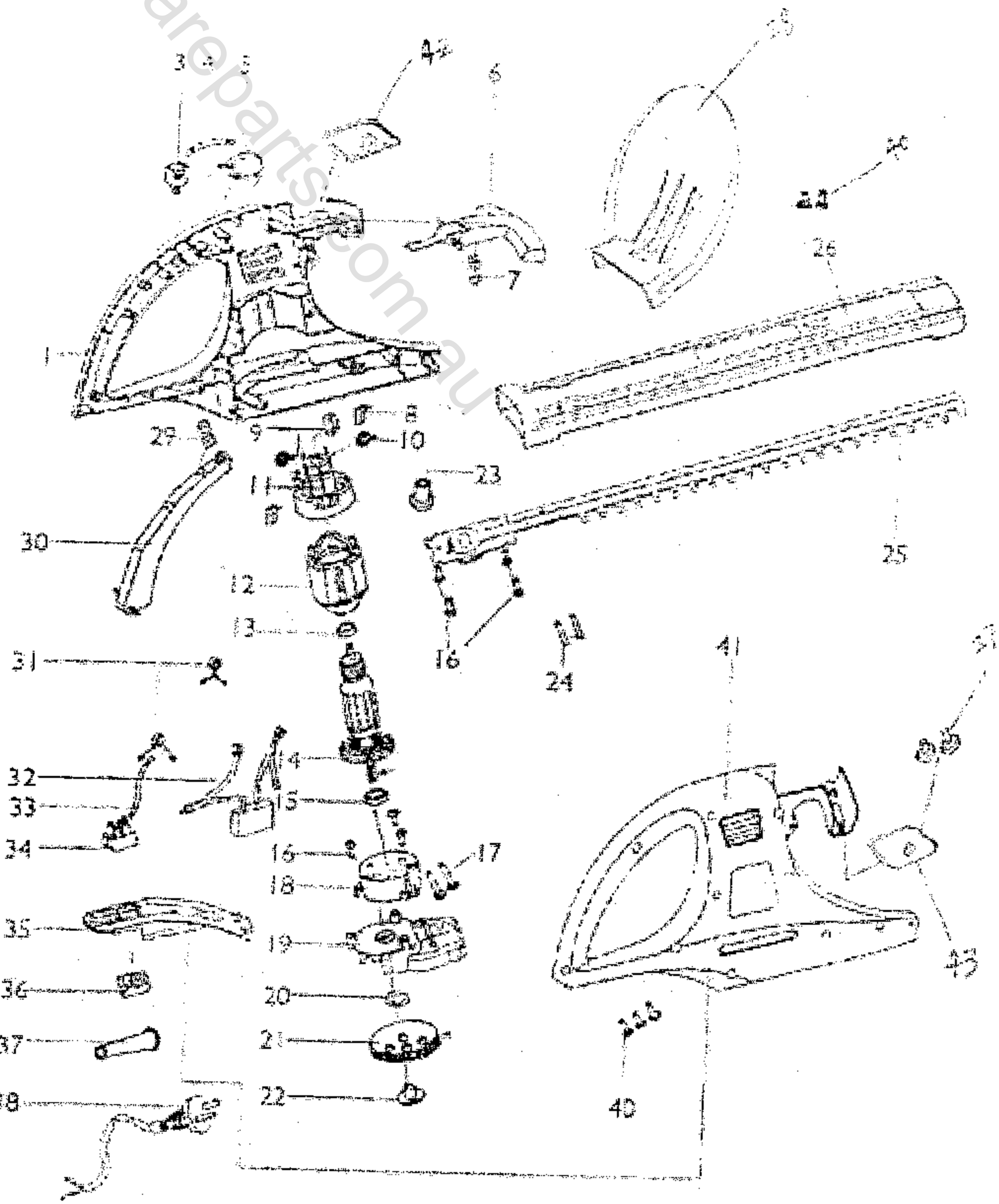

toolspartsdirect.com.au