SIZE	DRAWING NUMBER
4	099984004

TOLERANCE FOR ASSEMBLY

DIVISION DIMENSION	TOLERANCE (IT 12)
-10	±0.08
10-30	±0.11
30-50	±0.13
50-80	±0.15
80-120	±0.18
120-180	±0.20
180-250	±0.23
250-315	±0.26
315-400	±0.29
400-500	±0.32
500-630	±0.35
630-800	±0.40
800-1000	±0.45

REVISIONS

REV	ZONE	DESCRIPTION	ECM	CHECKED
01		DESIGN RELEASE LH/HCX 04/12/12	OP1203030	HCX 04/19/12

COMPUTERIZED DOCUMENT
NO MANUAL REVISIONS PERMITTED

OP
Uncontrolled copy for reference only (D.C.C)

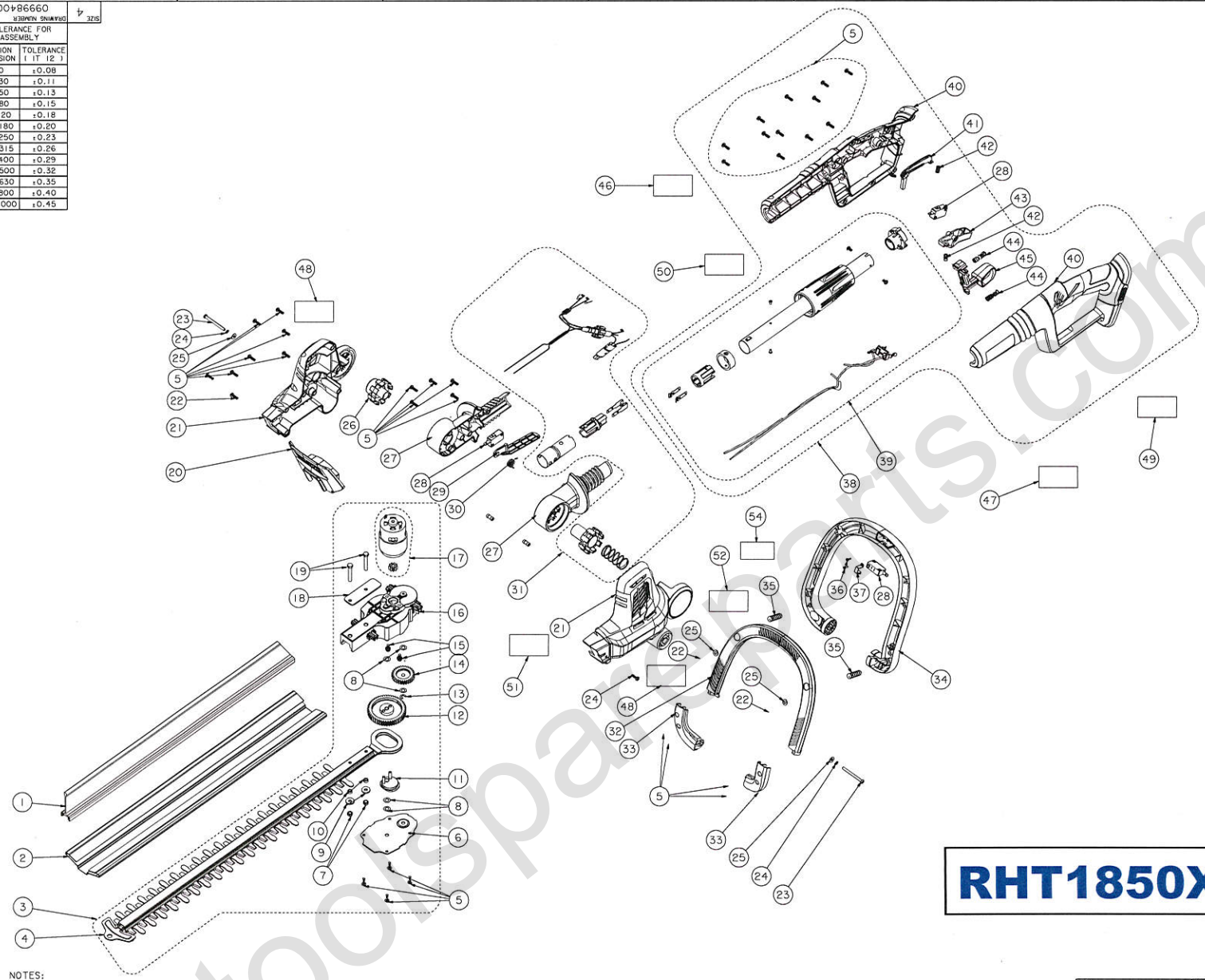

RHT1850XLI | **099984004**

NOTES:

(M) 1. REFER TO COMPONENT DRAWING FOR INSPECTION CRITERIA

2. SEE QUALITY ASSURANCE FOR ADDRESSING CRITICAL AND MAJOR DIMENSIONS

TOTAL (C) THIS PAGE = 0

TOTAL (M) THIS PAGE = 1

PART NUMBER	DESCRIPTION	REMARKS
099984004	18V LONG REACH HEDGE TRIMMER	AS PURCHASED

M.S.
P.S.
DIST --- PURCH/FAB P

"THIS DRAWING BELONGS TO TTI GROUP NORTH AMERICA. ITS CONTENTS ARE CONFIDENTIAL AND PROPRIETARY AND SHALL NOT BE DISCLOSED TO OR USED BY OR FOR OUTSIDE PARTIES WITHOUT TTI GROUP NORTH AMERICA'S WRITTEN CONSENT."

UNLESS OTHERWISE SPECIFIED DIMENSIONS ARE IN MILLIMETERS. FOR ALL UNSPECIFIED DIMENSIONS PLEASE REFER TO THE CAD FILE. DO NOT SCALE. USE DIMENSIONS ONLY. DIMENSION & TOLERANCE PER ASME Y14.5-2009

THIRD ANGLE PROJECTION

DRAWN BY LB 03/02/12 DATE
CHECKED BY HCX 03/02/12 DATE
APPROVED BY ZHJ 03/02/12 DATE
MATERIAL SEE BOM

TTI GROUP NORTH AMERICA
TITLE 18V LONG REACH HEDGE TRIMMER

SIZE 4 | DRAWING NUMBER 099984004 | REV 01
SCALE 1:4 | SHEET 1 OF 1

toolspareparts.com.au