309801005 DRAWN ON/AVO	4 SIZE

TOLERANCE FOR METAL

DIVISION DIMENSION	TOLERANCE (IT 12)
~10	±0.08
10-30	±0.11
30-50	±0.13
50-80	±0.15
80-120	±0.18
120-180	±0.20
180-250	±0.23
250-315	±0.26
315-400	±0.29
400-500	±0.32
500-630	±0.35
630-800	±0.40
800-1000	±0.45

REVISIONS

REV	ZONE	DESCRIPTION	ECR	CHECKED
01		DESIGN RELEASED	HL0801044	LY 01/28/08
02	B4	UPDATED COMPONENT ITEM 5	HL0804024	LLJ 04/11/08
	B5	UPDATED COMPONENT ITEM 3		
	B6	UPDATED COMPONENT ITEM 50		
03		ADDED LABEL AND UNEXPLODED TWO ASSY AMY/LLJ 04/20/09	HL0908017	LLJ 05/14/09

COMPUTERIZED DOCUMENT
NO MANUAL REVISIONS PERMITTED

Homelite
Uncontrolled copy for reference copy (U.C.C.)

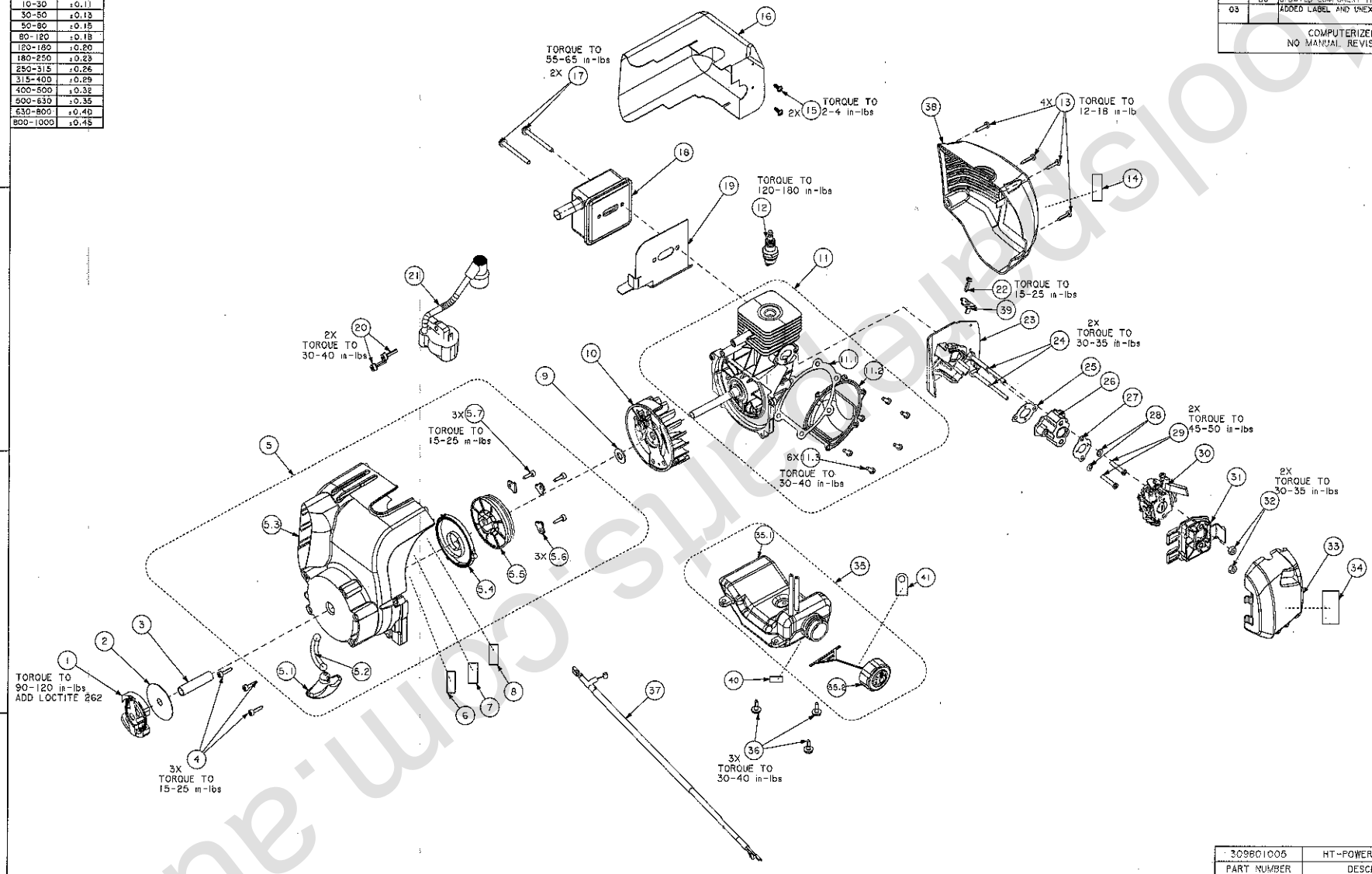

NOTES:

1.SEE QUALITY ASSURANCE FOR ADDRESSING CRITICAL AND MAJOR INSPECTIONS

TOTAL (C) DIMENSIONS ON THIS PAGE = 0
TOTAL (M) DIMENSIONS ON THIS PAGE = 0

PART NUMBER	DESCRIPTION	REMARKS
309801005	HT-POWER HEAD ASSY	AS PURCHASED

M.S.
P.S.
DIST ---
PURCH/FAB P

"THIS DRAWING BELONGS TO TTI GROUP NORTH AVERICA. ITS CONTENTS ARE CONFIDENTIAL AND PROPRIETARY AND SHALL NOT BE DISCLOSED TO OR USED BY OR FOR OUTSIDE PARTIES WITHOUT TTI GROUP NORTH AMERICA'S WRITTEN CONSENT."

UNLESS OTHERWISE SPECIFIED DIMENSIONS ARE IN MILLIMETERS. FOR ALL UNSPECIFIED DIMENSIONS PLEASE REFER TO THE CAD FILE. DO NOT SCALE. USE DIMENSIONS ONLY. DIMENSION & TOLERANCE PER ASME Y14.5M-1994

THIRD ANGLE PROJECTION

DRAWN BY AMY 08/08/07 DATE
CHECKED BY ARONG 08/08/07 DATE
APPROVED BY DLT 08/08/07 DATE
MATERIAL SEE BOM

TTI GROUP NORTH AMERICA

TITLE HT-POWER HEAD ASSY

SIZE 4 | DRAWING NUMBER 30980 | 005 | REV. 03
SCALE 2:5 | SHEET 1 OF 1

partsbook.com.au