SIZE	DRAWING NUMBER
4	090137022

TOLERANCE FOR ASSEMBLY	
DIVISION DIMENSION	TOLERANCE (IT 12)
-10	±0.08
10-30	±0.11
30-50	±0.13
50-80	±0.15
80-120	±0.18
120-180	±0.20
180-250	±0.23
250-315	±0.26
315-400	±0.29
400-500	±0.32
500-630	±0.35
630-800	±0.40
800-1000	±0.45

PRELIMNARY

REVISIONS				
REV	ZONE	DESCRIPTION	ECM	CHECKED
01		DESIGN RELEASE	XXXXXXX	XXX XX/XX/XX
COMPUTERIZED DOCUMENT NO MANUAL REVISIONS PERMITTED				

PRELIMNARY

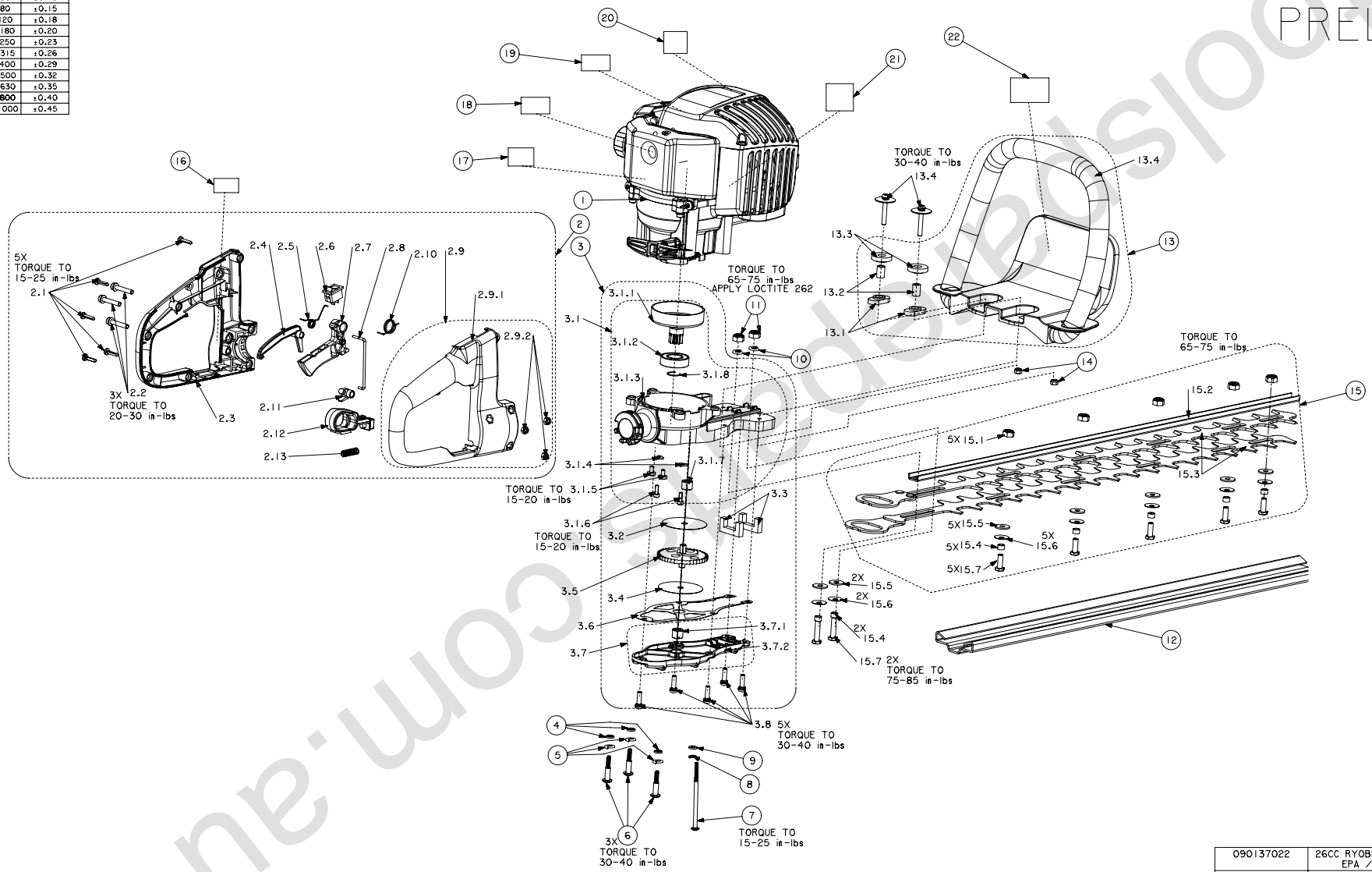

NOTES:

1.SEE QUALITY ASSURANCE FOR ADDRESSING CRITICAL AND MAJOR INSPECTIONS

TOTAL © DIMENSIONS THIS PAGE = 0

TOTAL Ⓜ DIMENSIONS THIS PAGE = 0

PRELIMNARY

PART NUMBER	DESCRIPTION	REMARKS
090137022	26CC RYOBI HEDGE TRIMMER EPA / RY39500B	AS PURCHASED

M.S.	UNLESS OTHERWISE SPECIFIED DIMENSIONS ARE IN MILLIMETERS. FOR ALL UNSPECIFIED DIMENSIONS PLEASE REFER TO THE CAD FILE. DO NOT SCALE. USE DIMENSIONS ONLY. DIMENSION & TOLERANCE PER ASME Y14.5-2009	DRAWN BY LB 02/16/11 DATE	TTI GROUP NORTH AMERICA
P.S.		CHECKED BY CDR 02/16/11 DATE	TITLE 26CC RYOBI HEDGE TRIMMER EPA / RY39500B
DIST X / PURCH/FAB X		APPROVED BY KW.MA 02/16/11 DATE	
"THIS DRAWING BELONGS TO TTI GROUP NORTH AMERICA. ITS CONTENTS ARE CONFIDENTIAL AND PROPRIETARY AND SHALL NOT BE DISCLOSED TO OR USED BY OR FOR OUTSIDE PARTIES WITHOUT TTI GROUP NORTH AMERICA'S WRITTEN CONSENT."	THIRD ANGLE PROJECTION	MATERIAL SEE BOM	SIZE 4 / DRAWING NUMBER 090137022 / REV 01
			SCALE NONE / SHEET OF 2

toolspareparts.com.au