DRAWING NUMBER	099979054
SCALE	4

TOLERANCE FOR PLASTIC	
DIVISION DIMENSION	TOLERANCE (CLASS 5)
~10	±0.10
10-30	±0.15
30-50	±0.20
50-75	±0.25
75-100	±0.30
100-125	±0.35
125 150	±0.40
150-175	±0.45
175-200	±0.50
200-250	±0.60
250-315	±0.70

OP
Uncontrolled copy for reference only (D.C.C)

REVISIONS					
REV	ZONE	DESCRIPTION		ECR	CHECKED
01		DESIGN RELEASE	CRAB 11/23/2011	DP1111076	GERARDO 11/25/11
02	C2	UPDATE BOM ADD PART 187	CRAB 01/03/2012	DP1201-002	GERARDO 01/05/12

COMPUTERIZED DOCUMENT
NO MANUAL REVISION PERMITTED

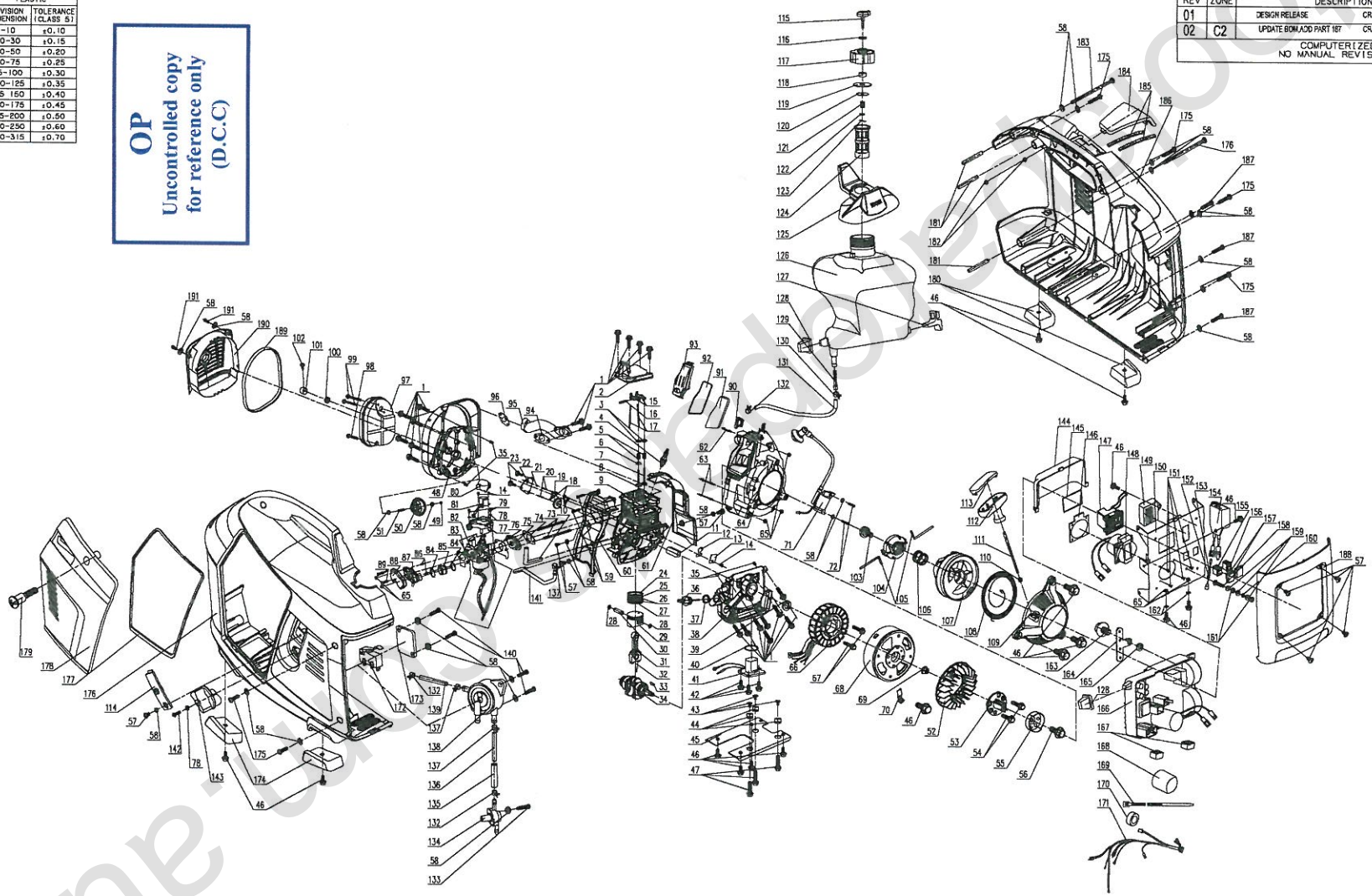

M.S.
P.S.
DIST PURCH/FAB

"THIS DRAWING BELONGS TO TTI GROUP NORTH AMERICA. IT'S CONTENTS ARE CONFIDENTIAL AND PROPRIETARY AND SHALL NOT BE DISCLOSED TO OR USED BY OR FOR OUTSIDE PARTIES WITHOUT TTI GROUP NORTH AMERICA'S WRITTEN CONSENT."

UNLESS OTHERWISE SPECIFIED DIMENSIONS ARE IN MILLIMETERS. FOR ALL UNSPECIFIED DIMENSIONS PLEASE REFER TO THE CAD FILE. DO NOT SCALE. USE DIMENSIONS ONLY. DIMENSION & TOLERANCE PER ASME Y14.5M-1994

THIRD ANGLE PROJECTION

		DATE
DRAWN BY	JHM	11/09/11
CHECKED BY	GERARDO	11/09/11
APPROVED BY	GERARDO	11/09/11
MATERIAL		

TTI GROUP NORTH AMERICA

TITLE: RIG1000 AU

SIZE 4 | DRAWING NUMBER 099979054 | REV 02

SCALE | SHEET 1 OF 2

ne-tools.com