DRAWING NUMBER	SIZE
309799021	4

TOLERANCE FOR ASSEMBLY	
DIVISION DIMENSION	TOLERANCE (IT 12)
-10	±0.08
10-30	±0.11
30-50	±0.13
50-80	±0.15
80-120	±0.18
120-180	±0.20
180-250	±0.23
250-315	±0.26
315-400	±0.29
400-500	±0.32
500-630	±0.35
630-800	±0.40
800-1000	±0.45

REVISIONS

REV	ZONE	DESCRIPTION	ECM	CHECKED
01		DESIGN RELEASED WLB/Y T 11/25/11	0P1111081	Y T 12/06/11
B		ADDED ITEM #45 ,#46 AND #47	XXXXXXXXX	XXX XXXXXXXXX

COMPUTERIZED DOCUMENT
NO MANUAL REVISIONS PERMITTED

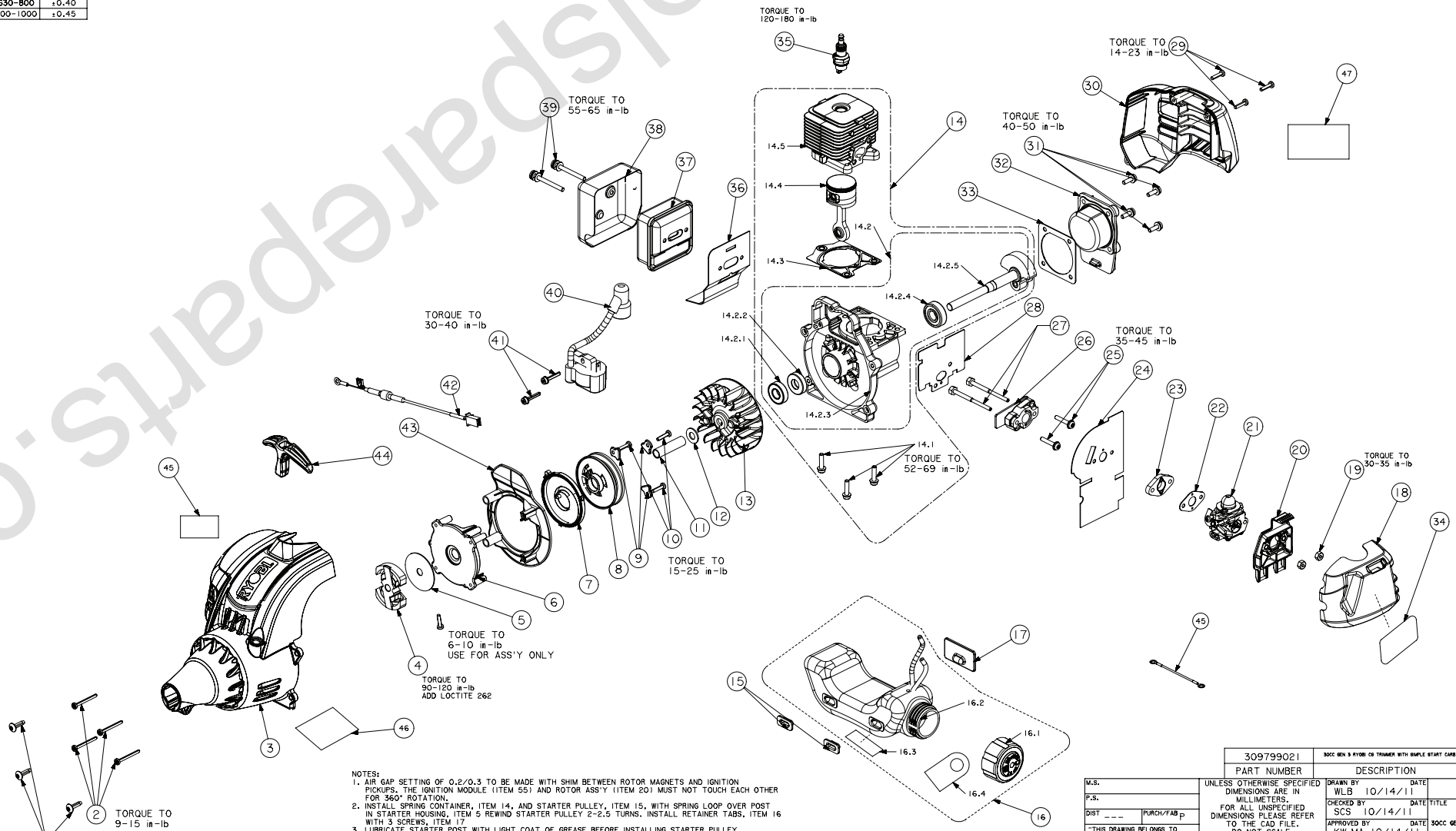

NOTES:
1. AIR GAP SETTING OF 0.2/0.3 TO BE MADE WITH SHIM BETWEEN ROTOR MAGNETS AND IGNITION PICKUPS. THE IGNITION MODULE (ITEM 55) AND ROTOR ASS'Y (ITEM 20) MUST NOT TOUCH EACH OTHER FOR 360° ROTATION.
2. INSTALL SPRING CONTAINER, ITEM 14, AND STARTER PULLEY, ITEM 15, WITH SPRING LOOP OVER POST IN STARTER HOUSING. ITEM 5 REWIND STARTER PULLEY 2-2.5 TURNS. INSTALL RETAINER TABS. ITEM 16 WITH 3 SCREWS, ITEM 17
3. LUBRICATE STARTER POST WITH LIGHT COAT OF GREASE BEFORE INSTALLING STARTER PULLEY.
4. SEE QUALITY ASSURANCE FOR ADDRESSING CRITICAL AND MAJOR INSPECTIONS:

TOTAL (C) DIMENSIONS ON THIS PAGE = 0

TOTAL (M) DIMENSIONS ON THIS PAGE = 0

PART NUMBER	DESCRIPTION	TRIMMER MODEL
309799021	30CC GEN 3 RYOBI CS TRIMMER WITH SIMPLE START CARB	AS PURCHASED

M.S.
P.S.
DIST ___ PURCH/FAB P

"THIS DRAWING BELONGS TO TTI GROUP NORTH AMERICA. ITS CONTENTS ARE CONFIDENTIAL AND PROPRIETARY AND SHALL NOT BE DISCLOSED TO OR USED BY OR FOR OUTSIDE PARTIES WITHOUT TTI GROUP NORTH AMERICA'S WRITTEN CONSENT."

UNLESS OTHERWISE SPECIFIED DIMENSIONS ARE IN MILLIMETERS. FOR ALL UNSPECIFIED DIMENSIONS PLEASE REFER TO THE CAD FILE. DO NOT SCALE. USE DIMENSIONS ONLY. DIMENSION & TOLERANCE PER ASME Y14.5-2009

THIRD ANGLE PROJECTION

DRAWN BY WLB	DATE 10/14/11	TTI GROUP NORTH AMERICA
CHECKED BY SCS	DATE 10/14/11	TITLE 30CC GEN 3 RYOBI CS TRIMMER WITH SIMPLE START CARB
APPROVED BY KW.MA	DATE 10/14/11	
MATERIAL SEE BOM		
SIZE 4	DRAWING NUMBER 309799021	REV B
SCALE 2:5	SHEET 1 OF 1	

toolsparepart.com