ISSUE	REVISION	NP/ECO	CHG BY DATE	CHK & APP DATE
A				

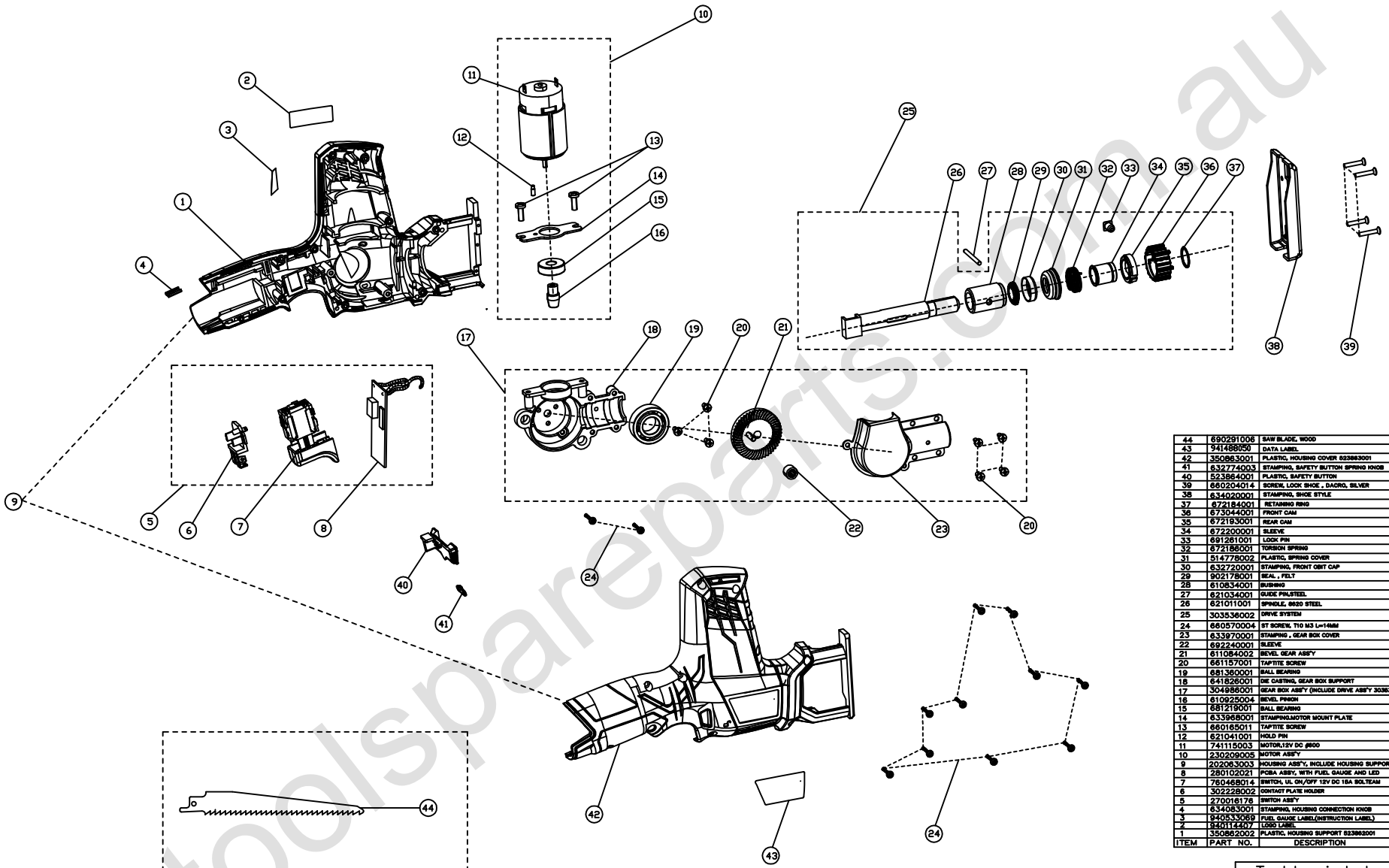

ITEM	PART NO.	DESCRIPTION	QTY.	REMARK
44	690291006	SAW BLADE, WOOD	1	
43	941488050	DATA LABEL	1	
42	350863001	PLASTIC, HOUSING COVER 523863001	1	
41	632774003	STAMPING, SAFETY BUTTON SPRING KNOB	1	
40	523864001	PLASTIC, SAFETY BUTTON	1	
39	660204014	SCREW, LOCK SHOE , DACRO, SILVER	4	
38	634020001	STAMPING, SHOE STYLE	1	
37	672184001	RETAINING RING	1	
36	673044001	FRONT CAM	1	
35	672193001	REAR CAM	1	
34	672200001	SLEEVE	1	
33	691261001	LOCK PIN	1	
32	672188001	TORSION SPRING	1	
31	514778002	PLASTIC, SPRING COVER	1	
30	632720001	STAMPING, FRONT OBIT CAP	1	
29	902178001	SEAL , FELT	1	
28	610834001	BUSHING	1	
27	621034001	GUIDE PIN,STEEL	1	
26	621011001	SPINDLE, S620 STEEL	1	
25	303536002	DRIVE SYSTEM		
24	660570004	ST SCREW, T10 M3 L=14MM	12	
23	633970001	STAMPING , GEAR BOX COVER	1	
22	692240001	SLEEVE	1	
21	611084002	BEVEL GEAR ASS'Y	1	
20	661157001	TAPTITE SCREW	7	
19	681360001	BALL BEARING	1	
18	641826001	DIE CASTING, GEAR BOX SUPPORT	1	
17	304986001	GEAR BOX ASS'Y (INCLUDE DRIVE ASS'Y 303536002)		
16	610925004	BEVEL PINION	1	
15	681219001	BALL BEARING	1	
14	633968001	STAMPING,MOTOR MOUNT PLATE	1	
13	660165011	TAPTITE SCREW	2	
12	621041001	HOLD PIN	1	
11	741115003	MOTOR,12V DC Ø800	1	
10	230209005	MOTOR ASS'Y		
9	202063003	HOUSING ASS'Y, INCLUDE HOUSING SUPPORT AND COVER		
8	280102021	PCBA ASSY, WITH FUEL GAUGE AND LED	1	
7	760468014	SWITCH, UL ON/OFF 12V DC 15A SOLTEAM	1	
6	302228002	CONTACT PLATE HOLDER	1	
5	270016176	SWITCH ASS'Y		
4	634083001	STAMPING, HOUSING CONNECTION KNOB	1	
3	940533069	FUEL GAUGE LABEL(INSTRUCTION LABEL)	1	
2	940114407	LOGO LABEL	1	
1	350862002	PLASTIC, HOUSING SUPPORT 523862001	1	

Techtronic Industries Co. Ltd.

description: PRUNING SAW		Model NO. 109484004	
MATL	DWN BY [illegible] Jan 10th,2013	DO NOT SCALE DRAWING	SCALE 1 : 1
FINISH/ TREATMENT	CHK BY	ALL DIMENSION IN mm	SHEET 1 OF 1
COLOR	APP BY(P.T.)	CAD FILE/PRT NO. 109484004	A0

toolspareparts.com.au