DRAWING NUMBER	099631001
TOLERANCE FOR PLASTIC	
DIVISION DIMENSION	TOLERANCE (CLASS 5)
-10	±0.10
10-30	±0.15
30-50	±0.20
50-75	±0.25
75-100	±0.30
100-125	±0.35
125 150	±0.40
150-175	±0.45
175-200	±0.50
200-250	±0.60
250-315	±0.70

OP
Uncontrolled copy for reference only (D.C.C)

REVISIONS

REV	ZONE	DESCRIPTION	ECR	CHECKED
01		DESIGN RELEASE WATER 10/10/12	OP1210030	GERARDO 10/10/12

COMPUTERIZED DOCUMENT
NO MANUAL REVISION PERMITTED

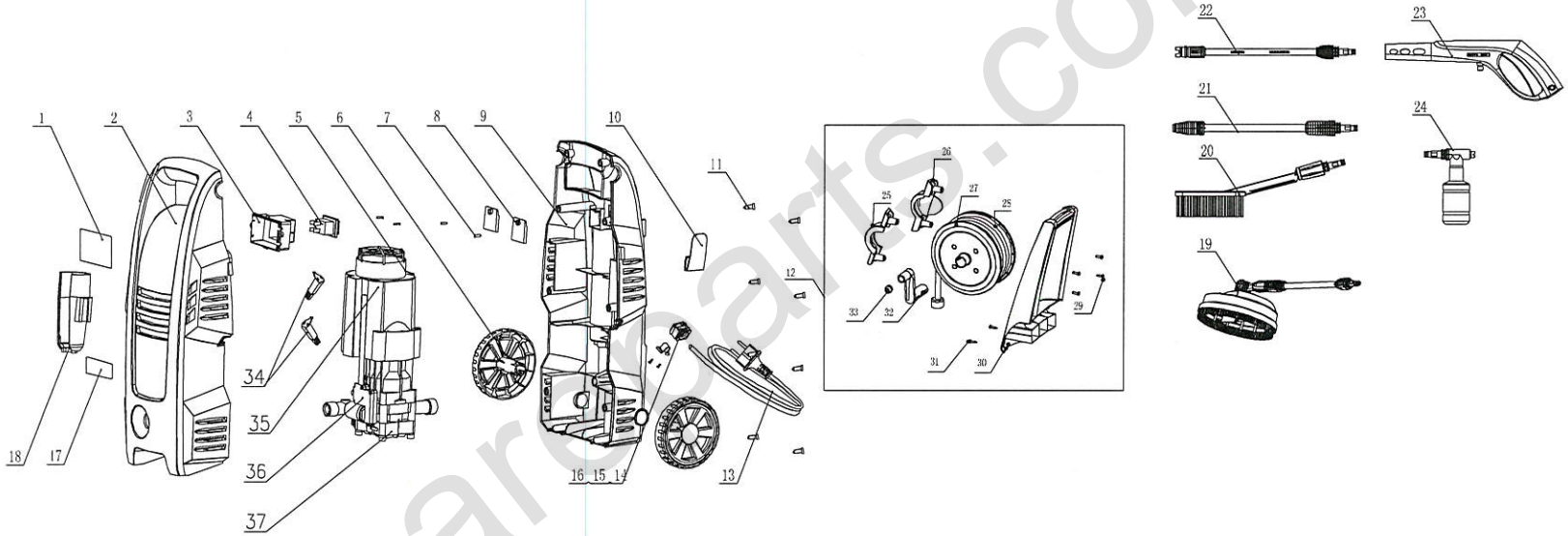

M.S.	UNLESS OTHERWISE SPECIFIED DIMENSIONS ARE IN MILLIMETERS. FOR ALL UNSPECIFIED DIMENSIONS PLEASE REFER TO THE CAD FILE. DO NOT SCALE. USE DIMENSIONS ONLY. DIMENSION & TOLERANCE PER ASME Y14.5M-1994 THIRD ANGLE PROJECTION	DRAWN BY WATER DATE 10/10/12	TTI GROUP NORTH AMERICA
P.S.		CHECKED BY GERARDO DATE 10/10/12	TITLE RPW130SC
DIST / PURCH/FAB		APPROVED BY GERARDO DATE 10/10/12	
"THIS DRAWING BELONGS TO TTI GROUP NORTH AMERICA. ITS CONTENTS ARE CONFIDENTIAL AND PROPRIETARY AND SHALL NOT BE DISCLOSED TO OR USED BY OR FOR OUTSIDE PARTIES WITHOUT TTI GROUP NORTH AMERICA'S WRITTEN CONSENT."		MATERIAL	SIZE 4 / DRAWING NUMBER 099631001 / 01 REV
			SCALE / SHEET 1 OF 1

toolspareparts.com.au