SIZE	DRAWING NUMBER
4	090079090

TOLERANCE FOR METAL

DIVISION DIMENSION	TOLERANCE (IT 12)
-10	±0.08
10-30	±0.11
30-50	±0.13
50-80	±0.15
80-120	±0.18
120-180	±0.20
180-250	±0.23
250-315	±0.26
315-400	±0.29
400-500	±0.32
500-630	±0.35
630-800	±0.40
800-1000	±0.45

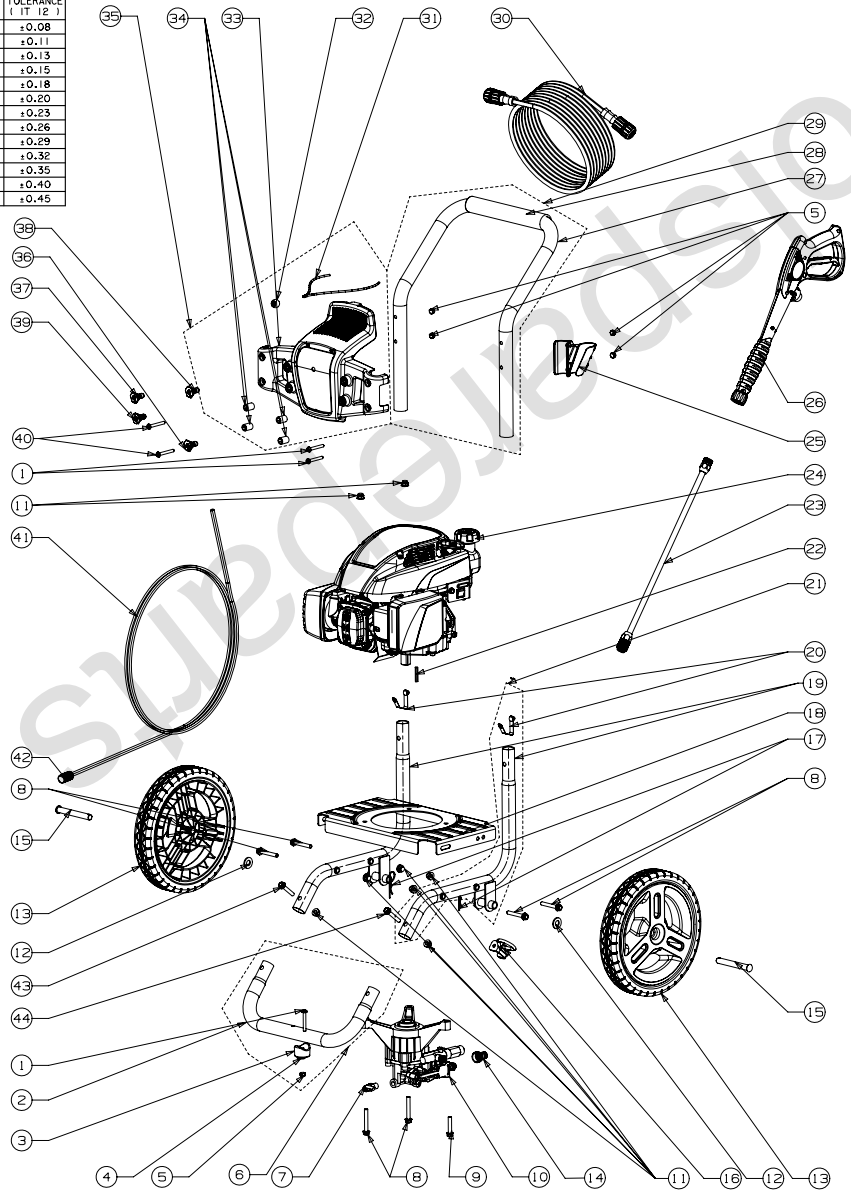

REVISIONS

REV	ZONE	DESCRIPTION	ECR	CHECKED
01		DESIGN RELEASED SACKY 08/11/09	HL0909011	HECTOR 09/02/09
02		ADDED 308751001 SACKY 11/03/09	HL 0911005	HECTOR 11/05/09
03		308760019 WAS 308760007 308451019 WAS 308451006 DELETED 519857001 308855013 WAS 308655004 308653025 WAS 308653006 308414001 WAS 308835006 JIM 10/14/11	OP1110053	GERARDO 11/01/11

COMPUTERIZED DOCUMENT
NO MANUAL REVISIONS PERMITTED

M.S.
P.S.
DIST - - - PURCH/FAB P

"THIS DRAWING BELONGS TO TTI GROUP NORTH AMERICA. ITS CONTENTS ARE CONFIDENTIAL AND PROPRIETARY AND SHALL NOT BE DISCLOSED TO OR USED BY OR FOR OUTSIDE PARTIES WITHOUT TTI GROUP NORTH AMERICA'S WRITTEN CONSENT."

UNLESS OTHERWISE SPECIFIED DIMENSIONS ARE IN MILLIMETERS. FOR ALL UNSPECIFIED DIMENSIONS PLEASE REFER TO THE CAD FILE. DO NOT SCALE. USE DIMENSIONS ONLY. DIMENSION & TOLERANCE PER ASME Y14.5M-1994

THIRD ANGLE PROJECTION

DRAWN BY SACKY 08/11/09 DATE
CHECKED BY HECTOR 08/11/09 DATE
APPROVED BY HECTOR 08/11/09 DATE
MATERIAL

TTI GROUP NORTH AMERICA

TITLE
RPW2400,RYOBI PETROL PRESSURE WASHER

SIZE 4 | DRAWING NUMBER 090079090 | REV 03
SCALE 1:5 | SHEET 1 OF 1

toolspareparts.co