ISSUE	REVISION	NP/ECO	CHG BY DATE	CHK & APP DATE
A				
B				

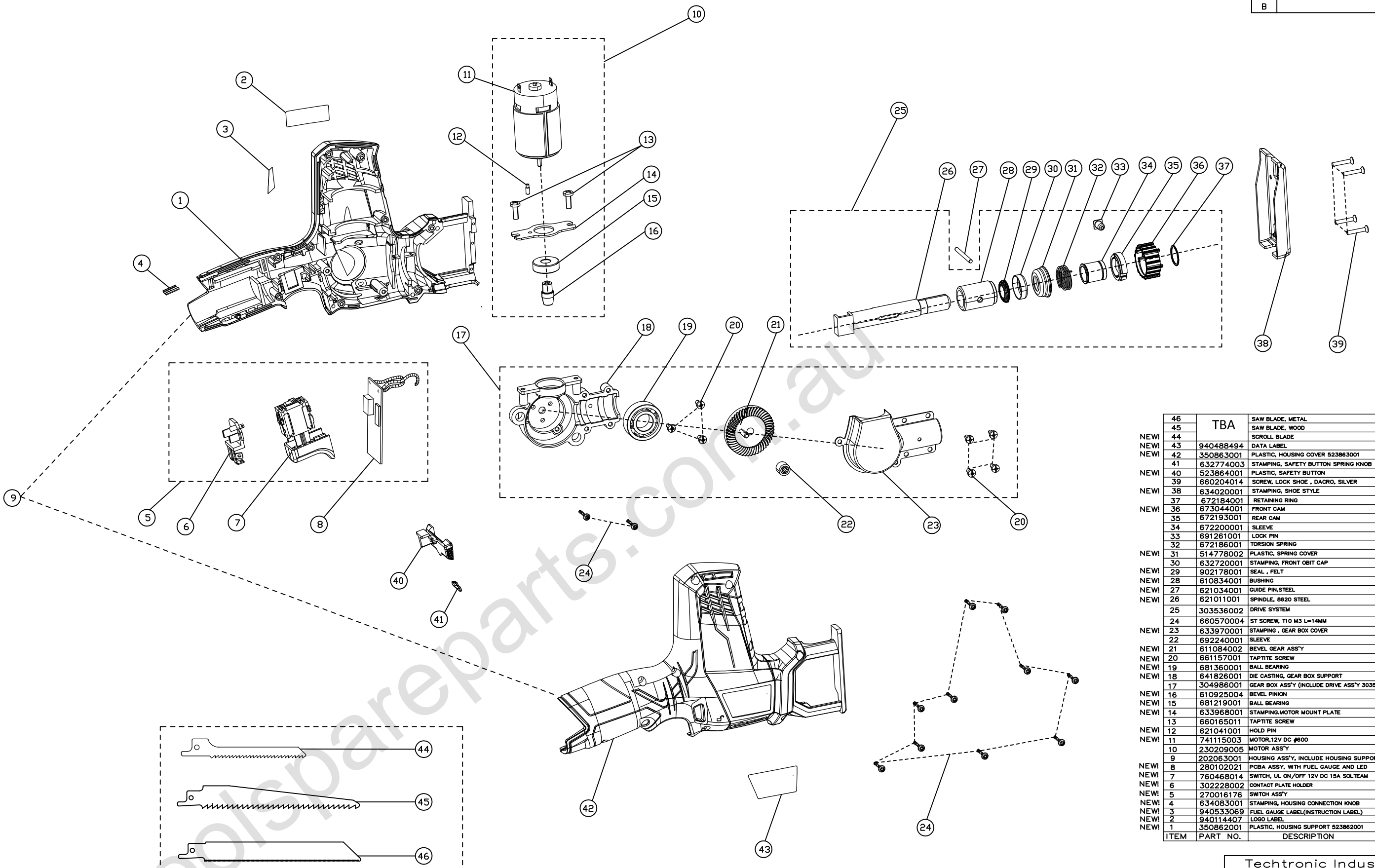

	ITEM	PART NO.	DESCRIPTION	QTY.	REMARK
	46	TBA	SAW BLADE, METAL	1	
	45		SAW BLADE, WOOD	1	
NEW!	44		SCROLL BLADE	1	
NEW!	43	940488494	DATA LABEL	1	
NEW!	42	350863001	PLASTIC, HOUSING COVER 523863001	1	
	41	632774003	STAMPING, SAFETY BUTTON SPRING KNOB	1	
NEW!	40	523864001	PLASTIC, SAFETY BUTTON	1	
	39	660204014	SCREW, LOCK SHOE , DACRO, SILVER	4	
NEW!	38	634020001	STAMPING, SHOE STYLE	1	
	37	672184001	RETAINING RING	1	
NEW!	36	673044001	FRONT CAM	1	
	35	672193001	REAR CAM	1	
	34	672200001	SLEEVE	1	
	33	691261001	LOCK PIN	1	
	32	672186001	TORSION SPRING	1	
NEW!	31	514778002	PLASTIC, SPRING COVER	1	
	30	632720001	STAMPING, FRONT OBIT CAP	1	
NEW!	29	902178001	SEAL , FELT	1	
NEW!	28	610834001	BUSHING	1	
NEW!	27	621034001	GUIDE PIN,STEEL	1	
NEW!	26	621011001	SPINDLE, 8620 STEEL	1	
	25	303536002	DRIVE SYSTEM		
	24	660570004	ST SCREW, T10 M3 L=14MM	12	
NEW!	23	633970001	STAMPING , GEAR BOX COVER	1	
	22	692240001	SLEEVE	1	
NEW!	21	611084002	BEVEL GEAR ASS'Y	1	
NEW!	20	661157001	TAPTITE SCREW	7	
NEW!	19	681360001	BALL BEARING	1	
NEW!	18	641826001	DIE CASTING, GEAR BOX SUPPORT	1	
	17	304986001	GEAR BOX ASS'Y (INCLUDE DRIVE ASS'Y 303536002)		
NEW!	16	610925004	BEVEL PINION	1	
NEW!	15	681219001	BALL BEARING	1	
NEW!	14	633968001	STAMPING.MOTOR MOUNT PLATE	1	
	13	660165011	TAPTITE SCREW	2	
NEW!	12	621041001	HOLD PIN	1	
NEW!	11	741115003	MOTOR,12V DC #600	1	
	10	230209005	MOTOR ASS'Y		
	9	202063001	HOUSING ASS'Y, INCLUDE HOUSING SUPPORT AND COVER		
NEW!	8	280102021	PCBA ASSY, WITH FUEL GAUGE AND LED	1	
NEW!	7	760468014	SWITCH, UL ON/OFF 12V DC 15A SOLTEAM	1	
NEW!	6	302228002	CONTACT PLATE HOLDER	1	
NEW!	5	270016176	SWITCH ASS'Y		
NEW!	4	634083001	STAMPING, HOUSING CONNECTION KNOB	1	
NEW!	3	940533069	FUEL GAUGE LABEL(INSTRUCTION LABEL)	1	
NEW!	2	940114407	LOGO LABEL	1	
NEW!	1	350862001	PLASTIC, HOUSING SUPPORT 523862001	1	

Techtronic Industries Co. Ltd.

TITLE: RRS1201 mini reciprocation saw		Model NO. 109484003	
MATL	DWN BY Harry.Liu Nov 24,2011	DO NOT SCALE DRAWING	SCALE 1 : 1
FINISH/ TREATMENT	CHK BY	ALL DIMENSION IN mm	SHEET 1 OF 1
COLOR	APP BY(P.T.)	CAD FILE/PRT NO.	A0

toolsspareparts.com.au