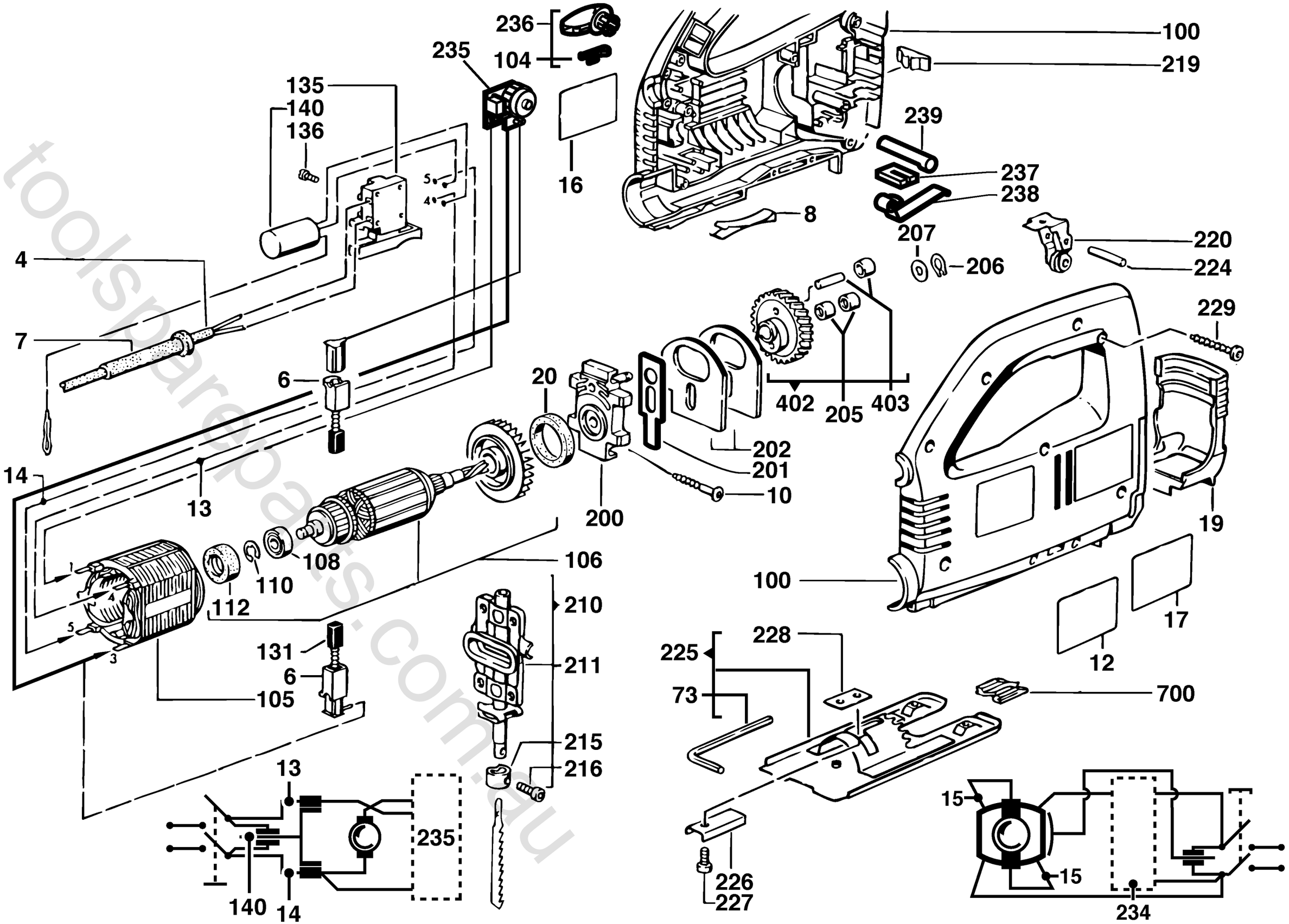

toolsparepaths.com.au