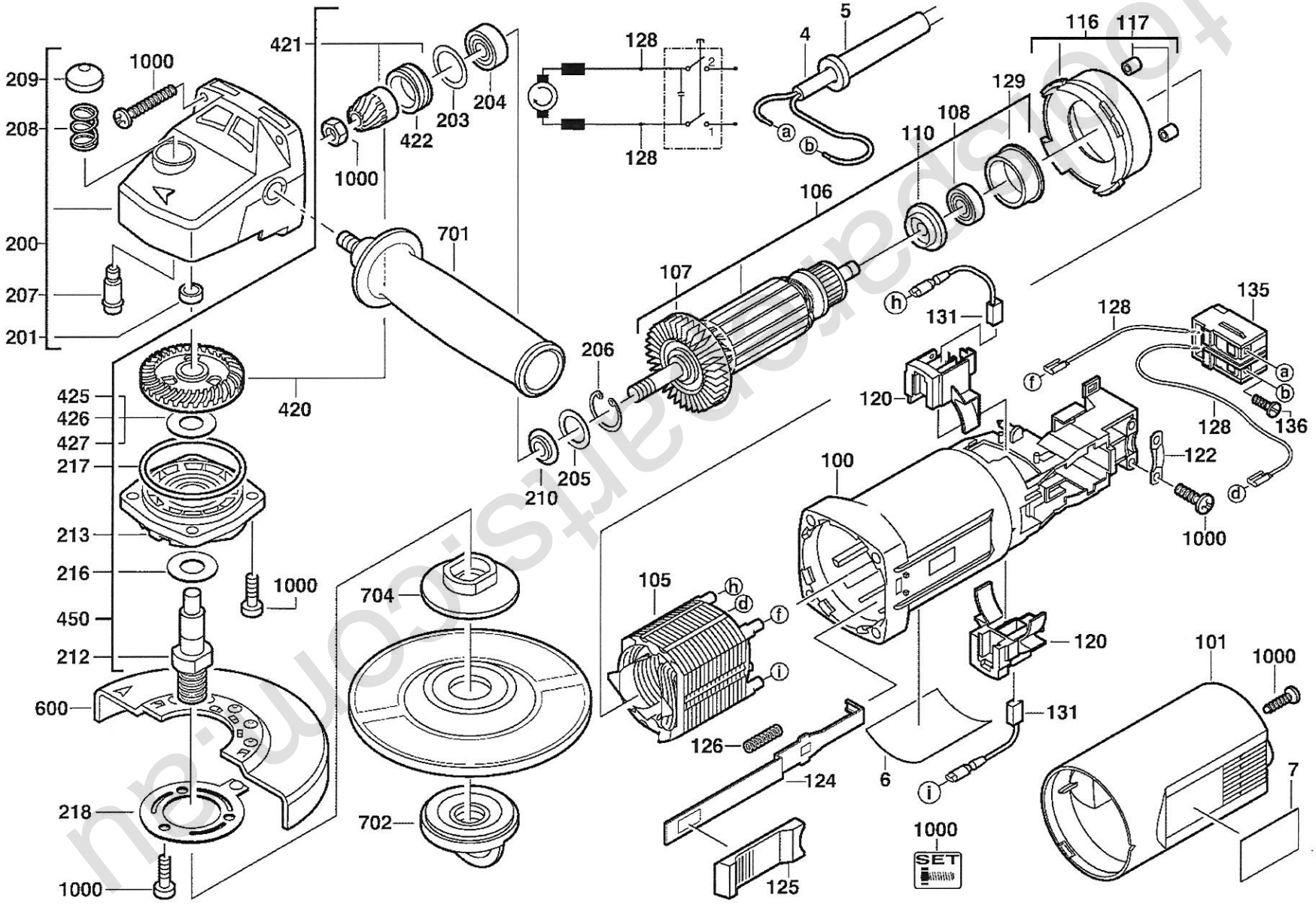

Product 4000381559 Type **WS1000/125** Voltage **220-240V** Country **IN2** Exp.view No. **4926381560**

A & M Electric Tools GmbH **V4.7a (2010/03)**